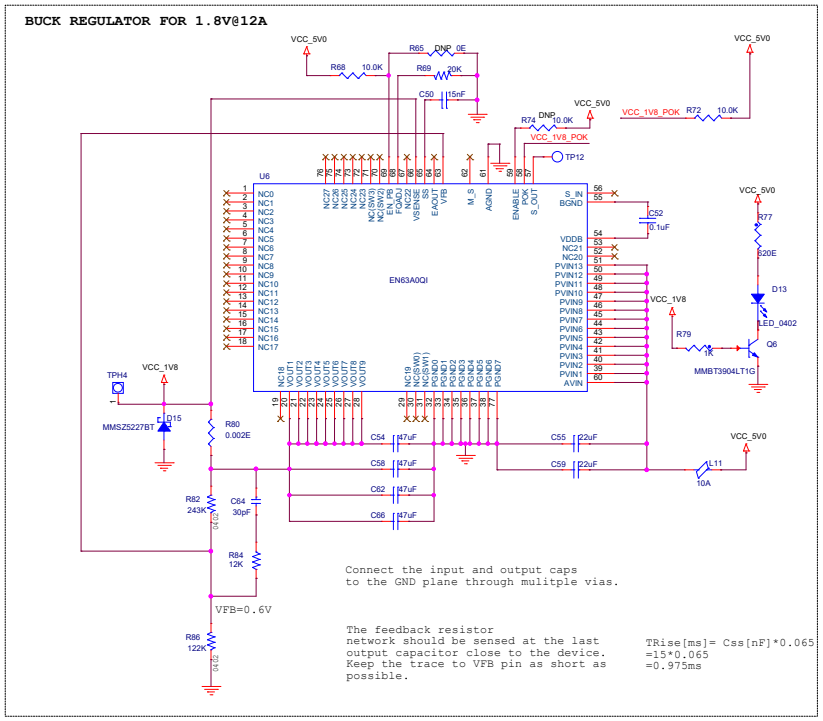
BUCK REGULATOR FOR 1.8V@12A
VCC_5V0
R68 10.0K
R65 DNP_0E
R69 20K
C50 15nF
R74 DNP 10.0K
VCC_1V8_POK
R72 10.0K
TP12
U6
EN63A0QI
C52 0.1uF
R77 820E
D13 LED_0402
R79 1K
Q6 MMBT3904LT1G
VCC_1V8
TPH4
MMSZ5227BT D15
R80 0.002E
R82 243K
C64 30pF
R84 12K
R86 122K
VFB=0.6V
C54 47uF
C58 47uF
C62 47uF
C66 47uF
C55 22uF
C59 22uF
L11 10A
Connect the input and output caps
to the GND plane through mulitple vias.
The feedback resistor
network should be sensed at the last
output capacitor close to the device.
Keep the trace to VFB pin as short as
possible.
TRise[ms]= Css[nF]*0.065
=15*0.065
=0.975ms

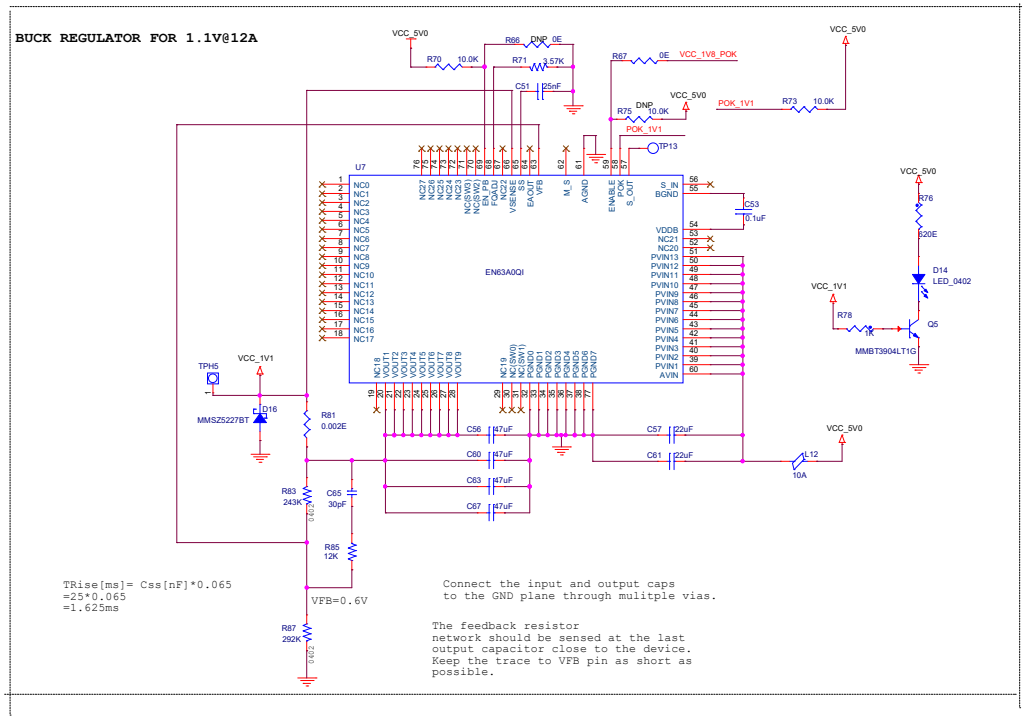
BUCK REGULATOR FOR 1.1V@12A
VCC_5V0
R70 10.0K
R66 DNP_0E
R71 3.57K
R67 0E
VCC_1V8_POK
C51 25nF
R75 DNP 10.0K
POK_1V1
R73 10.0K
TP13
U7
EN63A0QI
C53 0.1uF
R76 820E
D14 LED_0402
VCC_1V1
R78 1K
Q5 MMBT3904LT1G
TPH5
MMSZ5227BT D16
R81 0.002E
R83 243K
C65 30pF
R85 12K
R87 292K
VFB=0.6V
C56 47uF
C60 47uF
C63 47uF
C67 47uF
C57 22uF
C61 22uF
L12 10A
TRise[ms]= Css[nF]*0.065
=25*0.065
=1.625ms
Connect the input and output caps
to the GND plane through mulitple vias.
The feedback resistor
network should be sensed at the last
output capacitor close to the device.
Keep the trace to VFB pin as short as
possible.