REPORT NO.
EERC 72-8
DECEMBER 1972

EARTHQUAKE ENGINEERING RESEARCH CENTER

THREE DIMENSIONAL ANALYSIS OF BUILDING SYSTEMS - TABS

by

E. L. WILSON and H. H. DOVEY

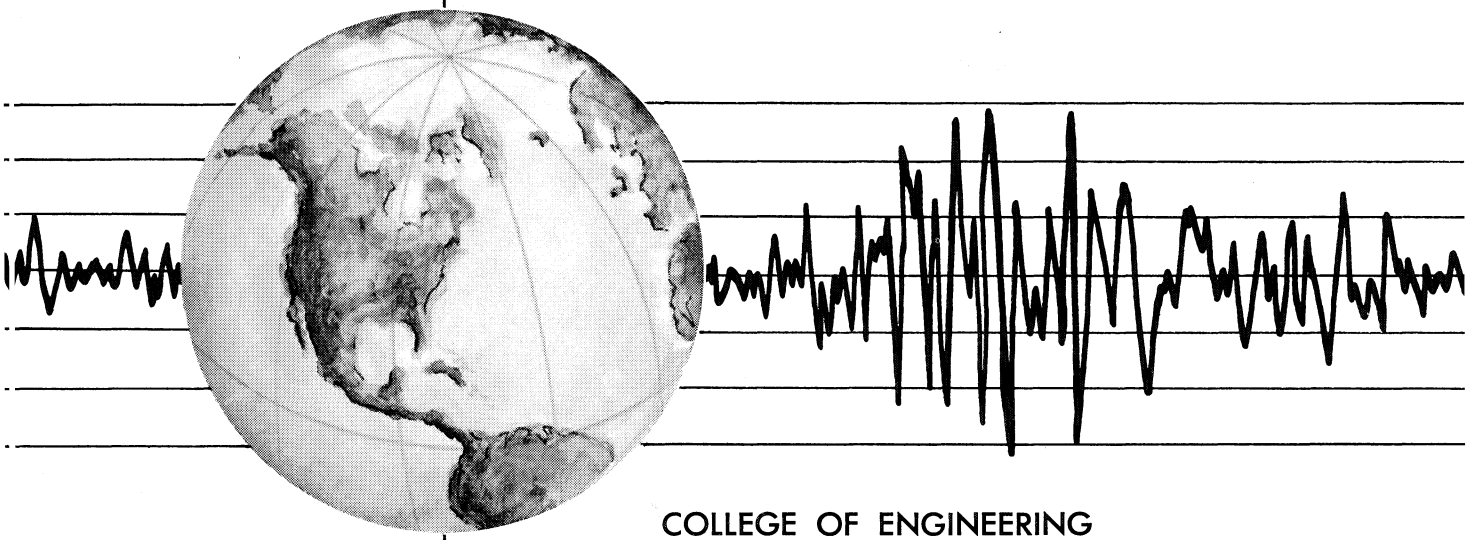

COLLEGE OF ENGINEERING

UNIVERSITY OF CALIFORNIA · Berkeley, California

THREE DIMENSIONAL ANALYSIS OF BUILDING SYSTEMS

by

E. L. Wilson and H. H. Dovey

December 1972

ABSTRACT

A procedure and a computer program are developed for the linear structural analysis of frame and shear wall buildings subjected to both static and earthquake loadings. The building is idealized by a system of independent frame and shear wall elements interconnected by floor diaphragms which are rigid in their own plane. Within each column bending, axial and shearing deformations are included. Beams and girders may be nonprismatic and bending and shearing deformations are included. Also, shear panels can be considered. Finite column and beam widths are included in the formulation. Nonsymmetric, nonrectangular buildings which have frames and shear walls located arbitrarily in plan can be considered. Three independent vertical and two lateral static loading conditions are possible. The static loads may be combined with a lateral earthquake input which is specified as a time-dependent ground acceleration or as an acceleration spectrum response. Three dimensional mode shapes and frequencies and evaluated.

Frame and shear walls are considered as substructures in the basic formulation; therefore, for many structures input data preparation can be minimized and a significant reduction in computational effort can result in this approach.

This report is a minor modification of previous report [7].

ACKNOWLEDGEMENT

The major part of the development and documentation of the computer program presented here has been sponsored by a National Science Foundation Research Grant GK-31586X. This project involves analytical and fullscale studies of buildings constructed by industrialized methods in Yugoslavia. The computer program presented in this report can be used for the dynamic analysis of most of these buildings. Professor Jack G. Bouwkamp is the principal investigator and coordinator for this project.

TABLE OF CONTENTS

INTRODUCTION

A. General Programs For Structural Analysis

There are many general two and three dimensional computer programs for the linear analysis of complex structures. Most of these programs can be used for the analysis of buildings; however, there are several disadvantages in the use of a general structural analysis program for a building system. Some of the major difficulties are the following:

1. The input data is unnecessarily complex since most buildings are of simple geometry with horizontal and vertical members.
2. Many of the frames and shear walls are typical. Most general programs do not recognize this fact; therefore, the input may be large and some internal calculations may be unnecessary.
3. The loading is of a restricted form and certain loads are applied at only a limited number of locations.
4. Most general programs do not recognize that the floor systems are very rigid in their own plane (this is true in most well designed buildings). If this assumption is not made the resulting set of equilibrium equations is very large and may cause an increase in computation effort by a factor of 10 to 100. Also, numerical errors may be introduced since the inplane floor stiffnesses are several orders of magnitude greater than the story to story stiffnesses; since these two stiffnesses are added in a direct

stiffness approach double precision may be required in the solution.

5. In many buildings the size of the members are large and centerline dimensions cannot be used to accurately describe the structure. Very few general purpose programs have a rigid joint option.
6. In the dynamic analysis of buildings the mass of the structure can be accurately lumped at the floor levels. This must be recognized if the resulting eigenvalue problem is to be of reasonable size.
7. In order to satisfy various loading requirements special options are required in order to combine vertical, wind and earthquake loadings.
8. It is desirable to have the computer output summarized in terms of a particular frame, story, column and beam. Also, special output such as story shears may be desirable.

Because of these and other reasons the need for special programs for building analysis is apparent.

B. Existing Building Analysis Programs

Four different programs have been developed at the University of California at Berkeley for the linear analysis of multistory buildings during the past ten years [1], [2], [3]. These programs have been used in the profession on many major structures in many different countries. One of the major reasons for the development of the program presented in this report was the direct "feedback" from the profession in the use of these programs.

The first program is identified as FRMSTC and is a static

load analysis of symmetrical buildings with parallel frames and shear walls. Lateral mode shapes and frequencies are also evaluated.

The program FRMDYN is the same as FRMSTC except that the load is the ground accelerations due to a specified earthquake time-dependent displacement and member forces are produced but are not combined with the static loads.

The program LATERAL is an extension of FRMSTC to the static analysis of a system of frames and shear walls which are not parallel. Three degrees of freedom exist at each story level. This program does not have dynamic options.

Recently, a general computer program for the analysis of complex beam and finite element systems has been developed. This program is called SAP and has an option which allows the rigid floor approximation to be introduced. However, it still has some of the limitations mentioned in the previous section. This program also has dynamic options.

The new computer program for the analysis of buildings which is presented in this report is intended to replace the first three programs. However, for a limited number of complex buildings, where incompatible column deformations are not acceptable approximations, a program such as SAP will still be the most appropriate type of program to use [4].

C. Earthquake Analysis of Buildings

At the present time, very few buildings in California, constructed in earthquake areas, are designed based on the results of a dynamic load analysis. The Uniform Building Code allows earthquake loads to be approximated by a static lateral load. The magnitude of

the load depends on the seismic zone and the fundamental period of the building. An approximate formula may be used to estimate the fundamental period. The suggested distribution of the lateral loads over the height of the building includes some approximation of second period effects. Also, local foundation characteristics are not included in the code. In addition, the code load requirements are only a small fraction of the loads developed during a significant earthquake. As a result of these limitations the need to conduct a more comprehensive earthquake analysis of buildings is apparent to most structural engineers [5].

There are several reasons why a more rational earthquake analysis of buildings has not been professionally implemented. First: the research which has been conducted in earthquake engineering has not specifically suggested how the code can be improved. Second: a design earthquake record or design spectra has not been suggested for buildings. Third: the effect of the foundation structure interaction during an earthquake has not been understood clearly. Finally, computer programs which adequately represent complex structures have not been presented to the profession in a form convenient for direct application.

One of the purposes of this report is to provide clarification of some of these areas. Hopefully, it will result in the development of more rational earthquake analysis methods.

2. STRUCTURAL IDEALIZATION

An exact three-dimensional structural analysis is required for only a limited number of buildings. For the majority of buildings two approximations can be made which greatly simplify the preparation of input data and significantly reduce the computational effort. Elevation and plan views of a typical building are shown in figure 1.

The assumption that the floors are rigid in their own plan is a realistic approximation (bending deformations in the horizontal beam and floor slabs are included). The horizontal lateral loads are assumed to act at floor levels. Therefore, the lateral loads are transferred to the columns and shear wall element through these rigid floor diaphragms. This results in three displacement degrees of freedom at each floor level--translation in the x and y directions and a rotation about the vertical axis. In addition, at column and shear walls at each floor level there is an additional vertical displacement and a rotation.

A. Complete Structure

The complete buildings considered here are composed of structural components which can be separated into a series of planar rectangular frames. Isolated shear walls are considered to be frames consisting of a single continuous column line. Each frame is treated as an independent substructure. The complete structure stiffness matrix is then formed under the assumption that all frames are connected at each floor level by a diaphram which is rigid in its own plane.

Each frame is permitted two degrees of freedom per joint (vertical displacement and in-plane rotation) and one lateral translation

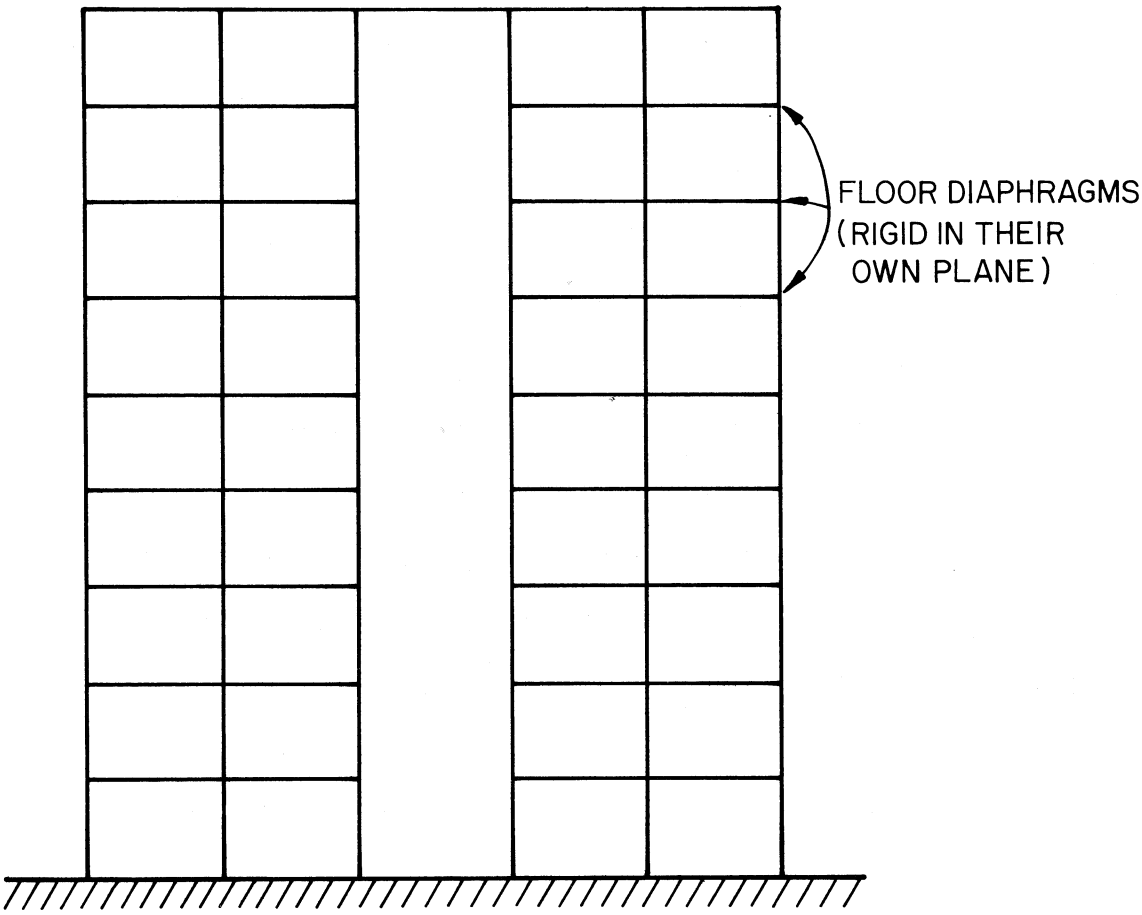

a) ELEVATION

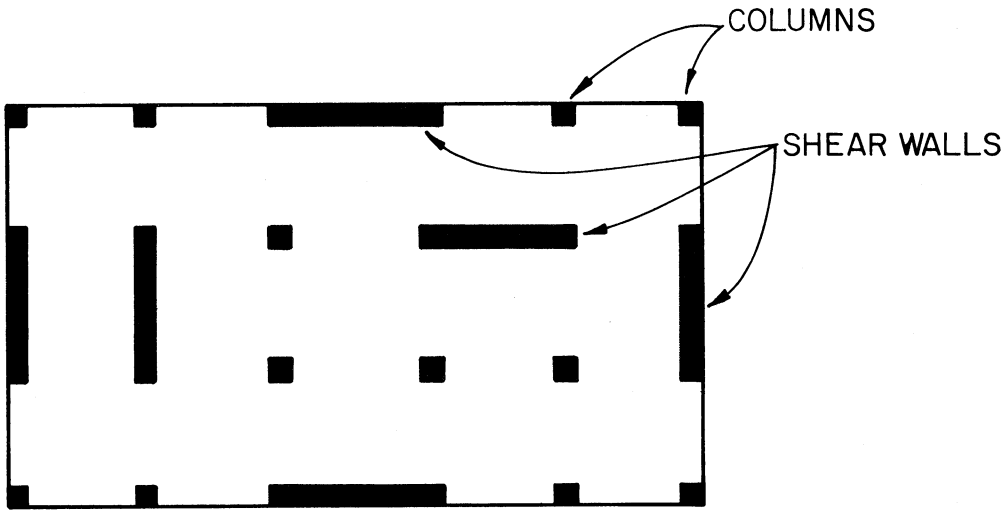

b) PLAN

FIGURE I TYPICAL FRAME AND SHEAR WALL BUILDING

per story. The two joint degrees of freedom being eliminated by static condensation before structure stiffness assembly. The structure stiffness array is permitted three degrees of freedom per story: two translations and one rotation in a horizontal plane.

The overall assumptions inherent in this approach are as follows:

1. Compatibility is not enforced with regard to joint displacements at joints which are common to more than one frame. Thus axial deformations in common columns will not be the same; however for design purposes, these column axial forces may be added directly to give reasonable results. As for joint rotations, if the frames with common members are perpendicular in plan view, then the rotations are uncoupled. For structures in which frames are not arranged in a reasonably rectangular fashion in plan, the use of this program is questionable.
2. The floor diaphrams are assumed to be rigid in their own planes. Bending stiffness of the floors may be included approximately in the modeling of the individual frames. It is apparent that axial deformation is not permitted in the beams. Floor levels must be the same for all frames.
3. Torsional stiffness is neglected for all members.

B. <u>The Frame Substructure</u>

An elevation of a typical frame is shown in figure 2. Column centerlines and floor levels are the basic reference lines used in the frame descriptions. Finite beam and column widths may be specified.

Deformations within joints (shown as shaded areas in figure 2)

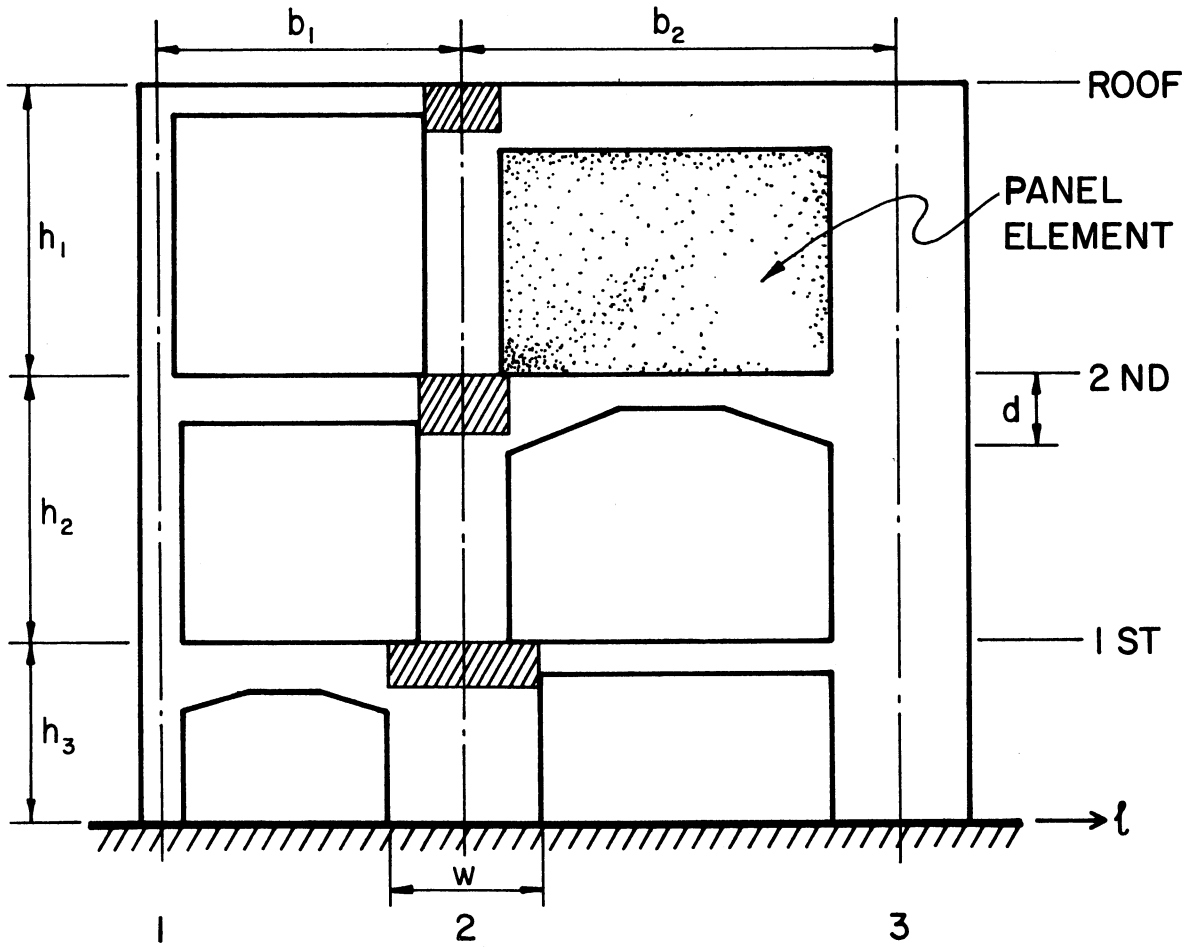

FIGURE 2 - ELEVATION VIEW (TYPICAL FRAME)

are neglected. Hence the effective length of a beam is reduced by half the width of the columns below. Also the effective height of a column is reduced by the average depth of the girders on either side of the column.

Columns must be prismatic; however shearing and axial deformations are included. Beams need not be prismatic but must be symmetric about their vertical midplane. Only stiffness and carry over factors are given. Shearing deformation may be considered by appropriate modification to the stiffness factors.

A special column (panel) element is included to model infill panels and discontinuous shear walls. This element is considered to carry shear and bending and may be arbitrarily placed within the frame.

Members may be omitted from any position simply by specifying zero properties. However it should be noted that if two adjacent beams are omitted, the lateral displacement of the common joint is still constrained to be the same as other joints at that level. Hence, the appropriate column is considered to be laterally supported at the floor level.

Vertical loading is applied to the individual frames by means of sets of fixed end forces associated with each beam. For uniform beams the fixed end forces can be calculated automatically within the program.

C. Lateral Frame Stiffness

The approximations described in the previous section allow each frame (or shear wall) to be treated as a separate substructure. The only connection is through the common displacements at the floor levels. The first step in the development of stiffness of the complete

building is to develop the lateral stiffness of each frame.

The complete stiffness matrix for each frame is assembled by the Direct Stiffness technique. With the frame degrees of freedom appropriately ordered, the frame equilibrium equations have the form shown below;

$$
\begin{bmatrix}
\underline{R}_1 \\ \underline{R}_2 \\ \underline{R}_3 \\ \cdot \\ \cdot \\ \underline{R}_n \\ \underline{R}_{n+1} \\ \cdot \\ \cdot \\ \cdot \\ \underline{R}_{N-1} \\ \underline{R}_N \\ \underline{P}_L
\end{bmatrix}
=
\begin{bmatrix}
\underline{K}_1 & \underline{C}_1 & & & & & & & & \underline{E}_1 \\
\underline{C}_1^T & \underline{K}_2 & \underline{C}_2 & & & & & & & \underline{E}_2 \\
 & \underline{C}_2^T & \underline{K}_3 & \underline{C}_3 & & & & & & \underline{E}_3 \\
 & & \ddots & \ddots & \ddots & & & & & \cdot \\
 & & & \ddots & \ddots & \ddots & & & & \cdot \\
 & & & & \underline{K}_n & \underline{C}_n & & & & \underline{E}_n \\
 & & & & \underline{C}_n^T & \underline{K}_{n+1} & & & & \underline{E}_{n+1} \\
 & & & & & & & & & \cdot \\
 & & & & & & & & & \cdot \\
 & & & & & & & & & \cdot \\
 & & & & & & & \underline{K}_{N-1} & \underline{C}_{N-1} & \underline{E}_{N-1} \\
 & & & & & & & \underline{C}_{N-1}^T & \underline{K}_N & \underline{E}_N \\
\underline{E}_1^T & \underline{E}_2^T & \cdot & \cdot & \underline{E}_n^T & \underline{E}_{n+1}^T & \cdots & \underline{E}_{N-1}^T & \underline{E}_N^T & \underline{K}_L
\end{bmatrix}
\begin{bmatrix}
\underline{r}_1 \\ \underline{r}_2 \\ \underline{r}_3 \\ \cdot \\ \cdot \\ \underline{r}_n \\ \underline{r}_{n+1} \\ \cdot \\ \cdot \\ \cdot \\ \underline{r}_{N-1} \\ \underline{r}_N \\ \underline{r}_L
\end{bmatrix}
\qquad (2.1)
$$

Where N is the number of stories in the frame, $\underline{r}_n$ is the vector of joint displacements (that is vertical displacement and rotation) at story level n and $\underline{r}_L$ is the vector of lateral story displacements. Note that the lateral loads, P_L are not known until the complete building is solved. Lateral loads are applied to the complete structure and are considered when the lateral stiffness matrix for the complete building is assembled. Evidently, Gaussian

elimination may be performed on the full system up to and including the equations

$$\underline{R}_N = \underline{C}_{N-1}\,\underline{r}_{N-1} + \underline{K}_N\,\underline{r}_N + \underline{E}_N\,\underline{r}_L \tag{2.2}$$

The last N equations ($\underline{r}_L$ is a vector of order N) may now be written as

$$\underline{P}_L + \underline{R}'_L = \underline{K}'_L\,\underline{r}_L \tag{2.3}$$

The vector $\underline{R}'_L$ is used to indicate that the lateral load submatrix is modified by the elimination process due to vertical loading on the frame. These terms represent the sidesway effects of a non-symmetrical structure or vertical loading. The matrix $\underline{K}'_L$ clearly represents the frame lateral stiffness matrix; i.e. the stiffness matrix of the frame in terms of only the lateral story displacements. Note that it is not necessary to know the applied lateral loads on the frame, $\underline{P}_L$,at this stage of the analysis.

Within the computer program however, the following approach is adopted in order to reduce core storage requirements.

The assembly and reduction process is carried out systematically story by story from the top of the structure such that at any level, n, we consider the system shown below:

$$\begin{Bmatrix} \underline{R}'_n \\ \underline{R}'_{n+1} \\ \underline{P}_L + \underline{R}'_L \end{Bmatrix} = \begin{bmatrix} \underline{K}'_n & \underline{C}'_n & \underline{E}'_n \\ \underline{C}'^{T}_n & \underline{K}'_{n+1} & \underline{E}'_{n+1} \\ \underline{E}'^{T}_n & \underline{E}'^{T}_{n+1} & \underline{K}'_L \end{bmatrix} \begin{Bmatrix} \underline{r}_n \\ \underline{r}_{n+1} \\ \underline{r}_L \end{Bmatrix} \tag{2.4}$$

where again the prime indicates that the submatrices may have been modified by previous elimination.

At each level the following steps are performed.

1. Add in the individual member stiffnesses for level n. These are shown below

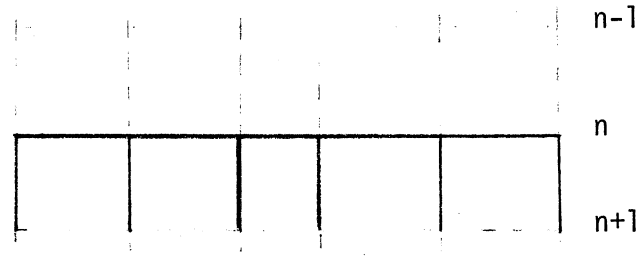

2. Perform the elimination on the equations of the uppermost partition in equation (2.4) above
3. Save these reduced equations for subsequent back-substitution.
4. Rearrange the submatrices in equation (2.4) appropriately in order to proceed to the next level. This rearrangement is as follows;

$$\begin{Bmatrix} \underline{R}'_{n+1} \\ \underline{0} \\ \underline{P}_L + \underline{R}'_L \end{Bmatrix} = \begin{bmatrix} K'_{n+1} & \underline{0} & \underline{E}'_{n+1} \\ \underline{0} & \underline{0} & \underline{0} \\ \underline{E}'^{T}_{n+1} & \underline{0} & \underline{K}'_L \end{bmatrix} \begin{Bmatrix} \underline{r}_{n+1} \\ \underline{r}_{n+2} \\ \underline{r}_L \end{Bmatrix} \qquad (2.5)$$

5. Repeat the above steps for the next level. Thus after the elimination is completed for joint displacements at all story levels, we are left with the lateral stiffness matrix for the frame.

D. <u>Individual Member Stiffness</u>

1. Column stiffness

In terms of deformation coordinates shown in figure 3, the column stiffness may be defined as follows:

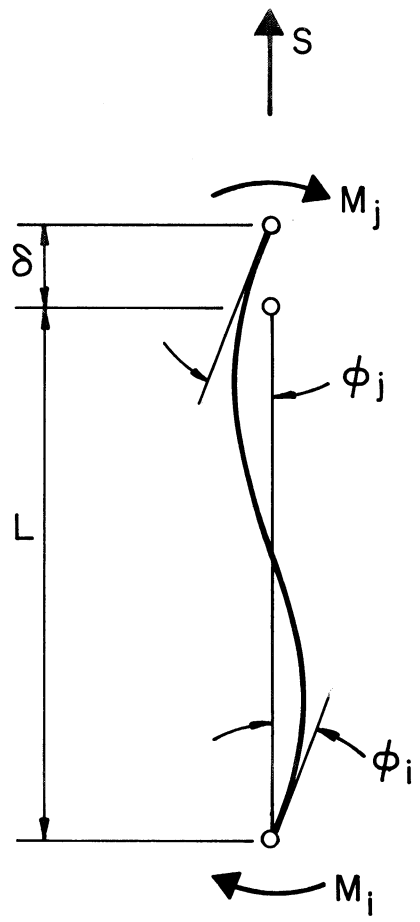

FIGURE 3 FLEXURAL MEMBER DEFORMATIONS

$$\begin{Bmatrix} M_i \\ M_j \\ S \end{Bmatrix} = \begin{bmatrix} S_a & S_b & 0 \\ S_b & S_a & 0 \\ 0 & 0 & S_c \end{bmatrix} \begin{Bmatrix} \phi_i \\ \phi_j \\ \delta \end{Bmatrix} \tag{2.6a}$$

or $\underline{S}_c = \underline{k}_c \, \underline{\phi}_c$ (2.6b)

where $S_a = \frac{2EI}{L} \left(\frac{2 + \beta}{1 + 2\beta} \right)$ (2.6c)

$S_b = \frac{2EI}{L} \left(\frac{1 - \beta}{1 + 2\beta} \right)$ (2.6d)

$S_c = \frac{AE}{L}$ (2.6e)

$\beta = \frac{6EI}{L^2 \bar{A} G}$ (2.6f)

where β is the shear flexibility factor, $\bar{A}$ is the effective shear area and other symbols are standard.

In line with the direct stiffness technique we now develop a transformation between the member deformations and frame displacements shown in figure 4. This transformation is given below:

$$\begin{Bmatrix} \phi_i \\ \phi_j \\ \delta \end{Bmatrix} = \begin{bmatrix} 1 & \frac{1}{L} & \frac{a}{L} & -\frac{1}{L} & 0 & 0 \\ 0 & \frac{1}{L} & 1 + \frac{a}{L} & -\frac{1}{L} & 0 & 0 \\ 0 & 0 & 0 & 0 & 1 & -1 \end{bmatrix} \begin{Bmatrix} \theta_B \\ u_B \\ \theta_T \\ u_T \\ v_B \\ v_T \end{Bmatrix} \tag{2.7}$$

Equations (2.6a) and (2.7) may be rewritten symbolically as follows.

$$\underline{S}_c = \underline{k}_c \, \underline{\phi}_c \tag{2.8}$$

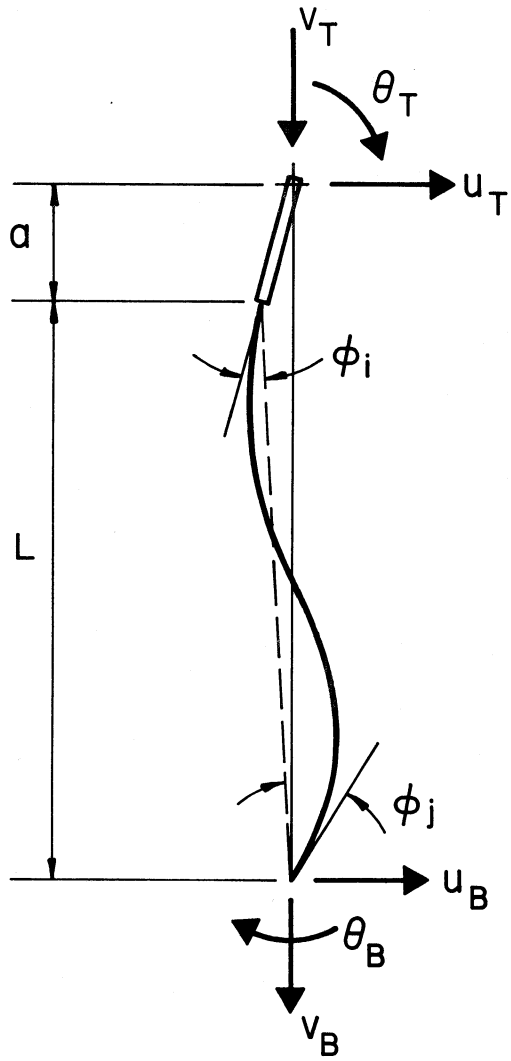

FIGURE 4 COLUMN DEFORMATIONS AND JOINT DISPLACEMENTS

and

$$\underline{\phi}_c = \underline{a}_c \; \underline{r}_c \tag{2.9}$$

where the subscript c indicates column, $\underline{a}_c$ is the transformation matrix and $\underline{r}_c$ denotes the appropriate subset of the frame displacements.

Following standard theory, the stiffness matrix for an individual column, $\underline{K}_c$ is given by

$$\underline{K}_c = \underline{a}_c^T \; \underline{k}_c \; \underline{a}_c \tag{2.10}$$

2. Beam member

Beam stiffness is derived in a very similar fashion except that the axial deformation term is neglected. In this case, equation (2.1a) becomes

$$\begin{Bmatrix} M_i \\ M_j \end{Bmatrix} = \begin{bmatrix} S_a & S_b \\ S_b & S_a \end{bmatrix} \begin{Bmatrix} \phi_i \\ \phi_j \end{Bmatrix} \tag{2.11}$$

or

$$\underline{S}_b = \underline{k}_b \; \underline{\phi}_b$$

With reference to figure 4, the transformation matrix is as follows;

$$\begin{Bmatrix} \phi_i \\ \phi_j \end{Bmatrix} = \begin{bmatrix} 1 + \frac{b}{L} & \frac{1}{L} & \frac{a}{L} & -\frac{1}{L} \\ \frac{b}{L} & \frac{1}{L} & 1 + \frac{a}{L} & -\frac{1}{L} \end{bmatrix} \begin{Bmatrix} \theta_L \\ v_L \\ \theta_R \\ v_R \end{Bmatrix} \tag{2.12}$$

or

$$\underline{\phi}_b = \underline{a}_b \; \underline{r}_b \tag{2.13}$$

From equations (2-11) and (2-13) the beam stiffness matrix, $\underline{K}_b$ is given by

$$\underline{K}_b = \underline{a}_b^T \; \underline{k}_b \; \underline{a}_b \tag{2.14}$$

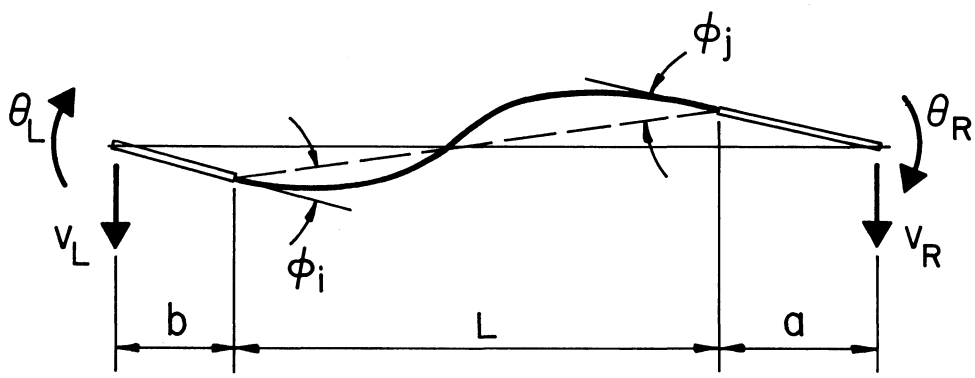

FIGURE 5 BEAM DEFORMATIONS AND JOINT DISPLACEMENTS

3. Panel Stiffness

The standard column stiffness including bending and shearing deformation (equations 2.6) is used. However each end rotational degree of freedom is transformed into the two vertical displacements of the adjacent joints. This approach requires special modelling details which are discussed in section 4D.

The deformation-displacement transformation matrix is given by

$$\begin{Bmatrix} \phi_i \\ \phi_j \\ \delta \end{Bmatrix} = \begin{bmatrix} \frac{1}{h} & -\frac{1}{h} & -\frac{1}{d} & \frac{1}{d} & 0 & 0 \\ \frac{1}{h} & -\frac{1}{h} & 0 & 0 & -\frac{1}{d} & \frac{1}{d} \\ 0 & 0 & \frac{1}{2} & \frac{1}{2} & -\frac{1}{2} & -\frac{1}{2} \end{bmatrix} \begin{Bmatrix} u_B \\ u_T \\ v_{LB} \\ v_{RB} \\ v_{LT} \\ v_{RT} \end{Bmatrix} \tag{2.15a}$$

or

$$\underline{\phi}_p = \underline{a}_p \; \underline{r}_p \tag{2.15b}$$

Member deformations and joint displacements are shown in Figure 6.

From equations (2.6) and (2.15), the panel stiffness matrix is given by

$$\underline{K}_p = \underline{a}_p^T \; \underline{k}_c \; \underline{a}_p \tag{2.16}$$

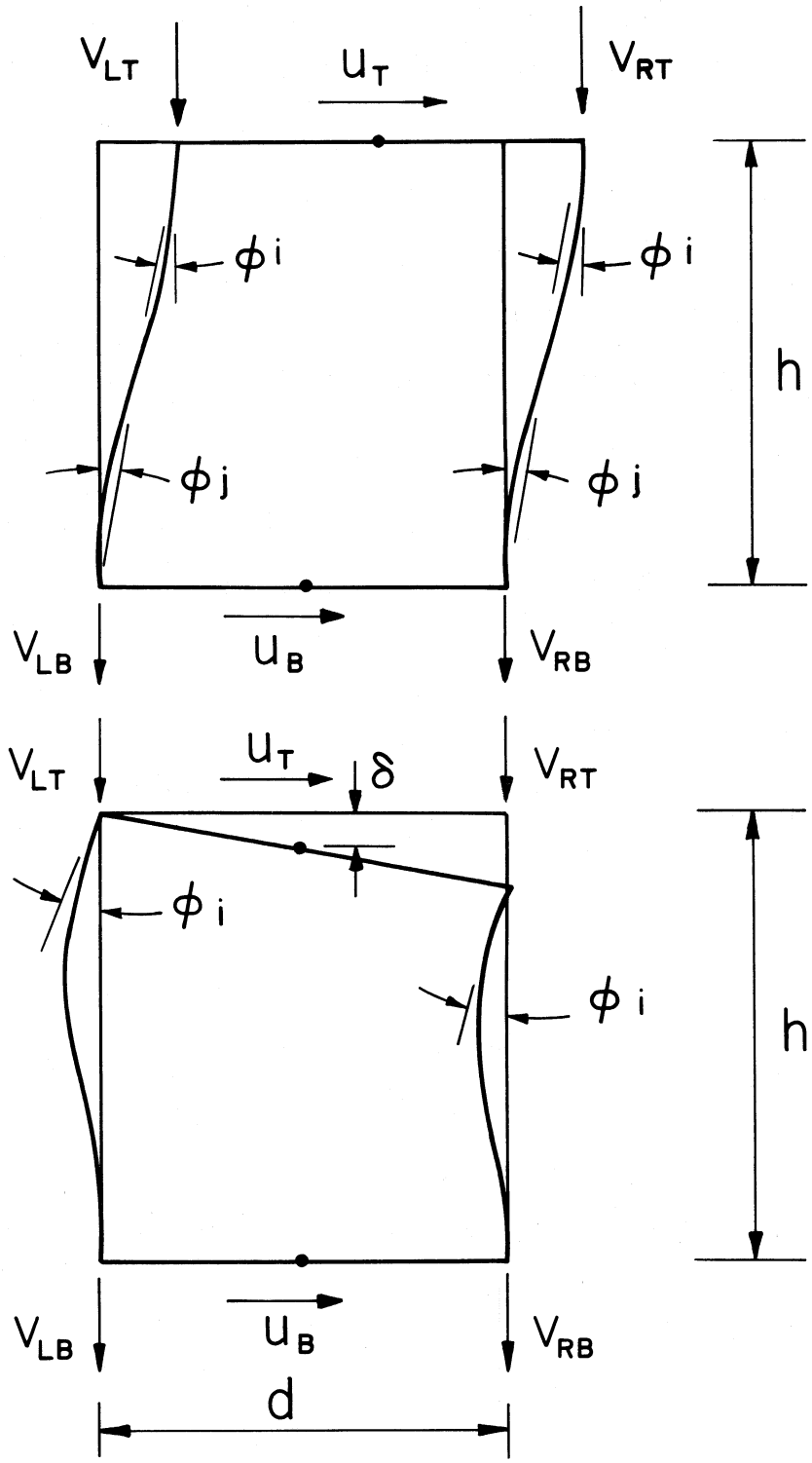

FIGURE 6 TYPICAL PANEL DEFORMATIONS AND JOINT DISPLACEMENTS

E. Assembly of Building Stiffness From Frame Stiffnesses

In order to combine the frame lateral stiffness matrices into a complete structure lateral stiffness matrix, each of the frame stiffnesses must be transformed to a common displacement coordinate system (which will be referred to as the global system). The global system chosen is two translations and one rotation per story. The origin of these global displacement coordinates at each story level is taken at the center of mass of that story segment. This position may vary from story to story. Therefore the mass matrix required for dynamic analysis will be a diagonal matrix thus simplifying the eigen-value solution.

The first step is to develop the transformation between the frame lateral displacements and the global displacements. With reference to figure 7, the transformation at any level, n is as follows;

$$r_{Ln} = \langle \cos\alpha \quad \sin\alpha \quad - d_n \rangle \begin{Bmatrix} r_{xn} \\ r_{yn} \\ r_{\theta n} \end{Bmatrix} \tag{2.17a}$$

where the symbols are defined in figure 7 or symbolically 2.19a is written as

$$r_{L.n} = \underline{a}_n \; \underline{r}_n \tag{2.17b}$$

Assembling the transformations for all floors, we obtain the complete transformation between frame lateral displacements and global displacement as follows.

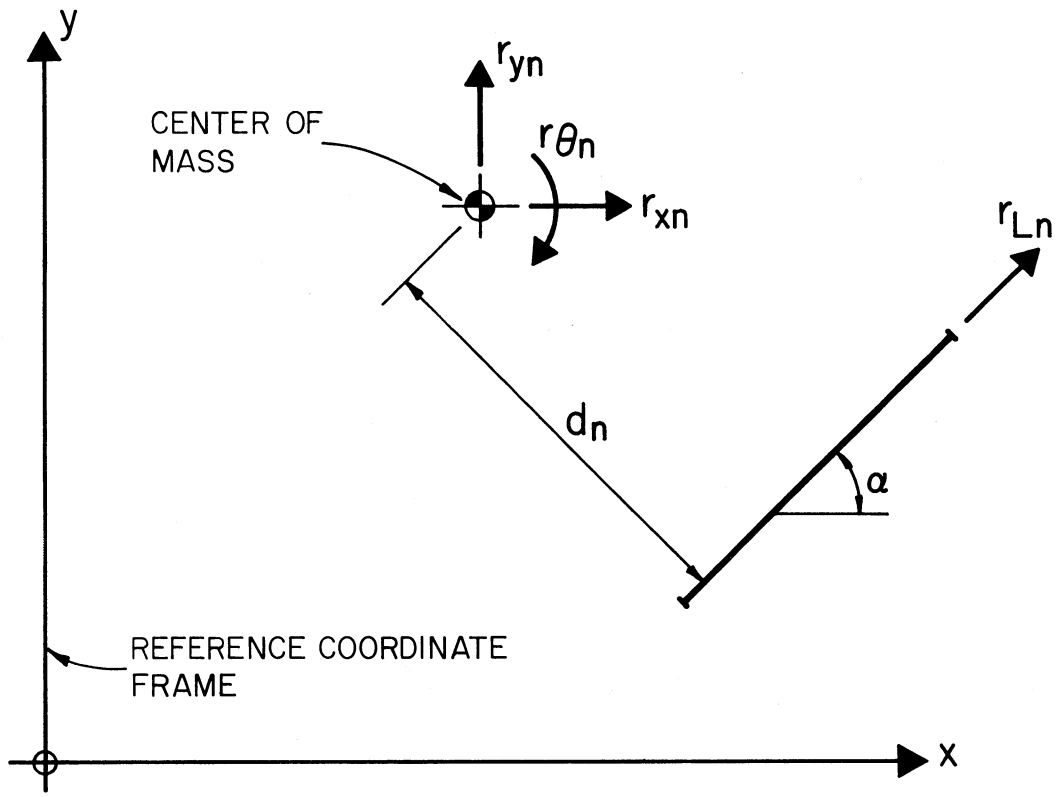

FIGURE 7 GLOBAL AND FRAME LATERAL DISPLACEMENTS

$$\begin{Bmatrix} r_{L1} \\ r_{L2} \\ \cdot \\ \cdot \\ r_{Ln} \\ \cdot \\ \cdot \\ r_{LN} \end{Bmatrix} = \begin{bmatrix} \underline{a}_1 & & & & & & \\ & \underline{a}_2 & & & & & \\ & & \cdot & & & & \\ & & & \cdot & & & \\ & & & & \underline{a}_n & & \\ & & & & & \cdot & \\ & & & & & & \cdot \\ & & & & & & & \underline{a}_N \end{bmatrix} \begin{Bmatrix} \underline{r}_1 \\ \underline{r}_2 \\ \cdot \\ \cdot \\ \underline{r}_n \\ \cdot \\ \cdot \\ \underline{r}_N \end{Bmatrix} \tag{2.18a}$$

or

$$\underline{r}_{Li} = \underline{A}_i \; \underline{r} \tag{2.18b}$$

$\underline{r}$ is the complete vector of global displacements. The frame lateral stiffness is transformed to the global system and becomes;

$$\underline{K}_i = \underline{A}_i^T \; \underline{K}_{Li} \; \underline{A}_i \tag{2.19}$$

where the subscript i denotes the ith frame.

The structure lateral stiffness is assembled by the addition of components from all frames: i.e.

$$\underline{K} = \sum_i \underline{K}_i \tag{2.20}$$

The frame lateral sway affects must also be transformed to the global system. This transformation is shown by;

$$\underline{R}_i = \underline{A}_i^T \; \underline{R}'_{Li} \tag{2.21}$$

The global load vector is formed by the summation of frame sway affects and the addition of externally applied lateral loads $\underline{F}$ i.e.

$$\underline{R} = \sum_i \underline{R}_i + \underline{F} \tag{2.22}$$

The global forces $\underline{F}$ are specified; however, they are also given by

$$\underline{F} = \Sigma\ A_i^T\ P_{Li} \tag{2.23}$$

It is worth noting the form of the transformation shown as equation (2 .19). When written in the submatrix form of equation (2 .18a), the transformation matrix $\underline{A}$ has diagonal form. Writing equation (2 .19) in expanded form, we have.

$$\underbrace{\begin{bmatrix} \underline{K}_{11} & \underline{K}_{12} & \cdot & & \cdot \\ \underline{K}_{21} & \underline{K}_{22} & \cdot & & \cdot \\ \cdot & \cdot & \cdot & & \\ & & \underline{K}_{ij} & & \\ & & & \cdot & \cdot \\ \cdot & \cdot & & \cdot & \underline{K}_{NN} \end{bmatrix}}_{\underline{K}_i} = \underbrace{\begin{bmatrix} \underline{a}_1^T & & & & \\ & \underline{a}_2^T & & & \\ & & \cdot & & \\ & & & \underline{a}_i^T & \\ & & & & \cdot \\ & & & & \underline{a}_N^T \end{bmatrix}}_{\underline{A}_i^T} \underbrace{\begin{bmatrix} k_{11} & k_{12} & \cdot & \cdot \\ \cdot & \cdot & \cdot & \cdot \\ & & & \\ \cdot & \cdot & & k_{NN} \end{bmatrix}}_{\underline{K}_{Li}} \underbrace{\begin{bmatrix} \underline{a}_1 & & & & \\ & \underline{a}_2 & & & \\ & & \cdot & & \\ & & & \underline{a}_j & \\ & & & & \cdot \\ & & & & \underline{a}_N \end{bmatrix}}_{\underline{A}_i}$$

A typical 3 x 3 submatrix $\underline{K}_{ij}$ within $\underline{K}_i$ has the form $\underline{a}_i^T\ \underline{k}_{ij}\ \underline{a}_j$ Obviously this product may be formed independently for each term in and added directly into $\underline{K}$.

Hence, the global equilibrium equations are formed.

$$\underline{R} = \underline{K}\ \underline{r} \tag{2.24}$$

It may be noted that the global stiffness $\underline{K}$ is a full matrix, but it is of course relatively small compared to the total number of degrees of freedom associated with all the frames in the structure.

F. Solution for Static Load Cases

The equations (2-24) are solved directly by Gaussian elimination giving a vector of global lateral displacements, $\underline{r}$ Next, for each frame, the lateral displacements, $\underline{r}_{Li}$ are computed using equation (2-17). To complete the solution for each frame, the following system is considered.

$$\underline{R}'_n = \begin{bmatrix} \underline{K}'_n & C'_n & E'_n \end{bmatrix} \begin{bmatrix} \underline{r}_n \\ \underline{r}_{n+1} \\ \underline{r}_L \end{bmatrix} \tag{2.25}$$

Note that these are the equations which were reduced, then saved at each level, n, of the frame. (Refer to equation 2.4). That is, $\underline{K}'_n$ was triangularized. At any stage, n, $\underline{r}_{n+1}$ and $\underline{r}_L$ are known and so $\underline{r}_n$ is computed by back substitution. To start this sequence, we simply note that for $n = N$ (the number of stories in the structure) $\underline{r}_{N+1}$ represents the displacements at the foundation which are zero since columns are assumed rigidly connected to the foundation. Thus the frame joint displacements are computed successively story by story and individual member forces may be computed at the same time in standard fashion.

3. EARTHQUAKE ANALYSIS

A. Mass Approximation

The exact formulation of the dynamic response of a structure involves an infinite number of degrees of freedom. For most structures, however, the response may be adequately described by a limited number of discrete points (or joints) within the system. In the buildings considered here, the response may be described by the lateral motions of each floor level, as previously described for the formation of the structure stiffness matrix. Correspondingly, the mass of the building is lumped at each floor level. With this lumped parameter idealization, equilibrium of the structure is described by a set of ordinary second order differential equations.

B. Dynamic Equilibrium Equations

The equilibrium equations for a structure, including dynamic effects, may be written in the following form;

$$\underline{M}\,\ddot{\underline{r}}_a + \underline{C}\,\dot{\underline{r}} + \underline{K}\,\underline{r} = \underline{P}\,(t) \tag{3.1}$$

where $\underline{M}$ = mass matrix

$\underline{C}$ = damping matrix

$\underline{K}$ = stiffness matrix

$\underline{P}\,(t)$ = applied load vector, which may be time varying

$\underline{r}$ = displacement vector of deformation relative to support motion

$\ddot{\underline{r}}_a$ = absolute acceleration vector

$\underline{r}$ and $\underline{r}_a$ are related in the following fashion

$$\underline{r}_a = \underline{v}_g + \underline{r} \tag{3.2a}$$

where $\underline{v}_g$ is the vector of pseudo-static displacements due to support movement. also

$$\ddot{\underline{r}}_a = \ddot{\underline{v}}_g + \ddot{\underline{r}} \tag{3.2b}$$

These vectors have the following form for a typical floor, of a building shown in figure 8 below.

$$\begin{Bmatrix} r_{xa} \\ r_{ya} \\ r_{\theta a} \end{Bmatrix}_n = \begin{Bmatrix} v_{gx} \\ v_{gy} \\ v_{g\theta} \end{Bmatrix} + \begin{Bmatrix} r_{xn} \\ r_{yn} \\ r_{\theta n} \end{Bmatrix} = \begin{Bmatrix} \sin\beta \\ \cos\beta \\ 0 \end{Bmatrix} v_g + \begin{Bmatrix} r_{xn} \\ r_{yn} \\ r_{\theta n} \end{Bmatrix}$$

and

$$\begin{Bmatrix} \ddot{r}_{xa} \\ \ddot{r}_{ya} \\ \ddot{r}_{\theta a} \end{Bmatrix}_n = \begin{Bmatrix} \sin\beta \\ \cos\beta \\ 0 \end{Bmatrix} \ddot{v}_g + \begin{Bmatrix} \ddot{r}_{xn} \\ \ddot{r}_{yn} \\ \ddot{r}_{\theta n} \end{Bmatrix} \tag{3.3a,b}$$

i.e

$$\underline{r}_{na} = \underline{b}\ \ddot{v}_g + \underline{r}_n \tag{3.3c}$$

Or, for all floors

$$\underline{r}_a = \underline{B}\ \ddot{v}_g + \underline{r} \tag{3.3d}$$

where

$$\underline{B} = \begin{Bmatrix} \underline{b}_1 \\ \underline{b}_2 \\ \underline{b}_3 \\ \cdot \\ \cdot \\ \underline{b}_N \end{Bmatrix}; \quad \underline{b}_1 = \underline{b}_2 \text{ etc.} \tag{3.3c}$$

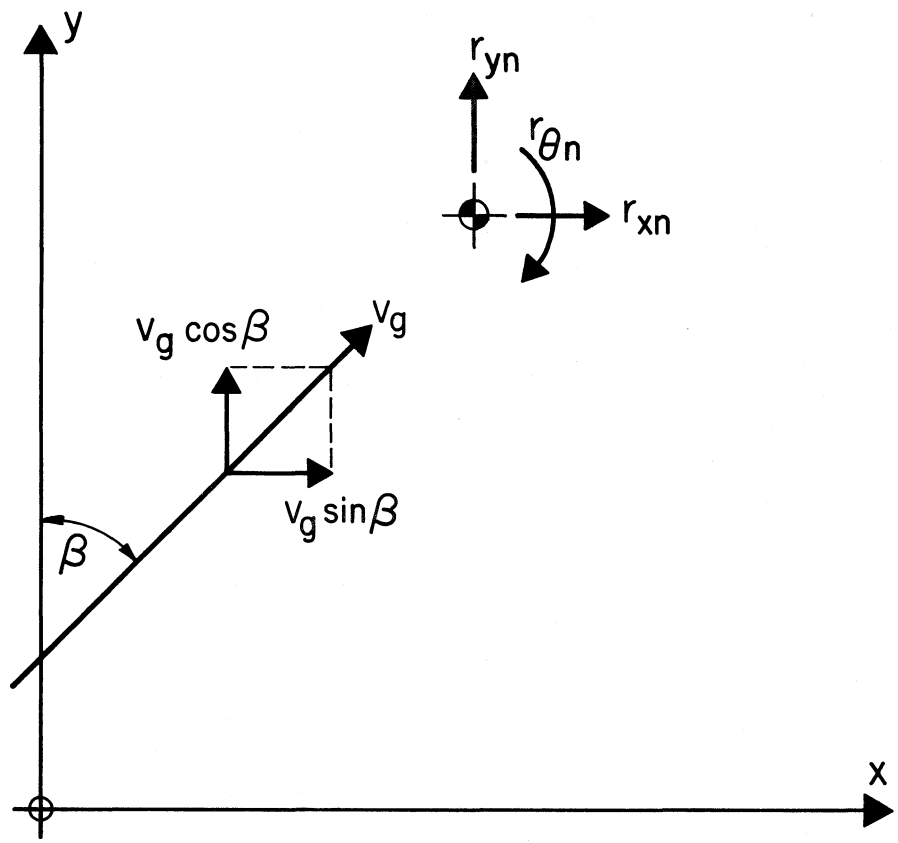

FIGURE 8 GROUND AND STRUCTURE DISPLACEMENTS

In the case of seismic analysis, there are no externally applied loads; i.e. $P(t) = 0$. Then equation (3.1) may be written as

$$\underline{M}\,(\ddot{\underline{r}} + \underline{B}\,\ddot{v}_g) + \underline{C}\,\dot{\underline{r}} + \underline{K}\,\underline{r} = \underline{0} \tag{3.4a}$$

or

$$\underline{M}\,\ddot{\underline{r}} + \underline{C}\,\dot{\underline{r}} + \underline{K}\,\underline{r} = -\,\underline{M}\,\underline{B}\,\ddot{\underline{v}}_g \tag{3.4b}$$

This coupled set of equations may be solved simultaneously with an appropriate numerical technique. Another approach, which will be used here, is to find a transformation which uncouples the equations so that they may be solved independently. This transformation of course is via the eigenvectors or mode shapes of the system.

C. Mode Shapes and Frequencies

The vibration mode shapes represent the solution of the undamped free vibration problem given by

$$\underline{M}\,\ddot{\underline{r}} + \underline{K}\,\underline{r} = \underline{0} \tag{3.5}$$

The eigenvalue problem to be solved is written as

$$\underline{K}\,\underline{\phi} = \underline{w}^2\,\underline{M}\,\underline{\phi} \tag{3.6}$$

where $\underline{\phi}$ = mode shapes

$\underline{w}$ = frequencies

The mode shapes are normalized such that

$$\underline{\phi}^T \; \underline{M} \; \underline{\phi} = \underline{I} \tag{3.7a}$$

then also

$$\underline{\phi}^T \; \underline{K} \; \underline{\phi} = \underline{w}^2 \tag{3.7b}$$

Also, it is assumed that the damping matrix $\underline{C}$ is of a form that is uncoupled by the mode shapes; specifically it is assumed that

$$\underline{\phi}^T \; \underline{C} \; \underline{\phi} = \left[2\lambda_m \; w_m \right] \tag{3.7c}$$

so that λ_m represents the damping of the m th mode.

The actual displacements, $\underline{r}$, are now expressed as a linear combination of the mode shapes.

$$\underline{r} = \left[\underline{\phi}_1 \quad \underline{\phi}_2 \quad \underline{\phi}_3 \quad \cdots \quad \underline{\phi}_N \right] \begin{bmatrix} Z_1(t) \\ Z_2(t) \\ \vdots \\ Z_N(t) \end{bmatrix} \tag{3.8a}$$

i.e. $$\underline{r} = \underline{\phi} \; \underline{Z} \tag{3.8b}$$

also $$\dot{\underline{r}} = \underline{\phi} \; \dot{\underline{Z}} \tag{3.8c}$$

and $$\ddot{\underline{r}} = \underline{\phi} \; \ddot{\underline{Z}} \tag{3.8d}$$

where $Z_m(t)$ represents the response of the m th mode.

D. Dynamic Response Analysis

Using equations (3.8), equation (3.4b) may be rewritten as

$$\underline{M} \; \underline{\phi} \; \ddot{\underline{Z}} + \underline{C} \; \underline{\phi} \; \dot{\underline{Z}} + \underline{K} \; \underline{\phi} \; \underline{Z} = - \underline{M} \; \underline{B} \; \ddot{v}_g \tag{3.9}$$

Premultiplication by $\underline{\phi}^T$ yields the uncoupled set of second order equations

$$\underline{M}^* \ddot{\underline{Z}} + \underline{C}^* \dot{\underline{Z}} + \underline{K}^* \underline{Z} = \underline{P}^* \ddot{v}_g \tag{3.10}$$

where

$$\underline{M}^* = \underline{\phi}^T \underline{M} \underline{\phi} = \underline{I} \tag{3.11a}$$

$$\underline{C}^* = \underline{\phi}^T \underline{C} \underline{\phi} = [\ 2\lambda_m w_m\ ] \tag{3.11b}$$

$$\underline{K}^* = \underline{\phi}^T \underline{K} \underline{\phi} = [\ w_m^2\ ] \tag{3.11c}$$

$$\underline{P}^* \ddot{v}_g = \underline{\phi}^T \underline{M} \underline{B} \ddot{v}_g \tag{3.11d}$$

to find the form of $\underline{P}^*$, consider

$$\underline{M}\ \underline{B} = \begin{bmatrix} m_1 & & & & & & & & \\ & m_1 & & & & & & & \\ & & J_1 & & & & & & \\ & & & m_2 & & & & & \\ & & & & m_2 & & & & \\ & & & & & J_2 & & & \\ & & & & & & \cdot & & \\ & & & & & & & \cdot & \\ & & & & & & & & \cdot \\ & & & & & & & & & J_N \end{bmatrix} \begin{Bmatrix} \sin\beta \\ \cos\beta \\ 0 \\ \sin\beta \\ \cos\beta \\ 0 \\ \cdot \\ \cdot \\ \cdot \\ \cdot \\ 0 \end{Bmatrix} \tag{3.12a}$$

where m_1 = mass of story 1

J_1 = rotational mass moment of inertia of story 1

i.e.

$$\underline{M}\ \underline{B} = \begin{bmatrix} m_1 \sin\beta \\ m_1 \cos\beta \\ 0 \\ m_2 \sin\beta \\ m_2 \cos\beta \\ 0 \\ \vdots \end{bmatrix} \tag{3.12b}$$

So, a typical term of $\underline{P}^*$ has the form

$$P^*_m = \underline{\phi}^T_m\ \underline{M}\ \underline{B} \tag{3.13a}$$

$$= \langle \phi_{1x}\ \phi_{1y}\ \phi_{1\theta}\ \phi_{2x}\ \phi_{2y}\ \phi_{2\theta}\ \ldots \rangle \begin{Bmatrix} m_1 \sin\beta \\ m_1 \cos\beta \\ 0 \\ m_2 \sin\beta \\ m_2 \cos\beta \\ 0 \\ \vdots \end{Bmatrix} \tag{3.13b}$$

$$P^*_m = \sum_{n=1}^{N} m_n \{ \sin\beta\ \phi_{nx} + \cos\beta\ \phi_{ny} \} \tag{3.13c}$$

Now a typical equation governing the response in the m th mode has the form

$$\ddot{Z}_m + 2\lambda_m w_m \dot{Z}_m + w_m^2 Z_m = P^*_m \ddot{v}_g \tag{3.14}$$

For any earthquake, the ground acceleration, $\ddot{v}_g$ is specified as a set of discrete values and linear interpolation is used for intermediate values. On any linear portion then

$$\ddot{v}_g = A + Bt \tag{3.15a}$$

where A and B are computed from the end values as shown on Figure 9

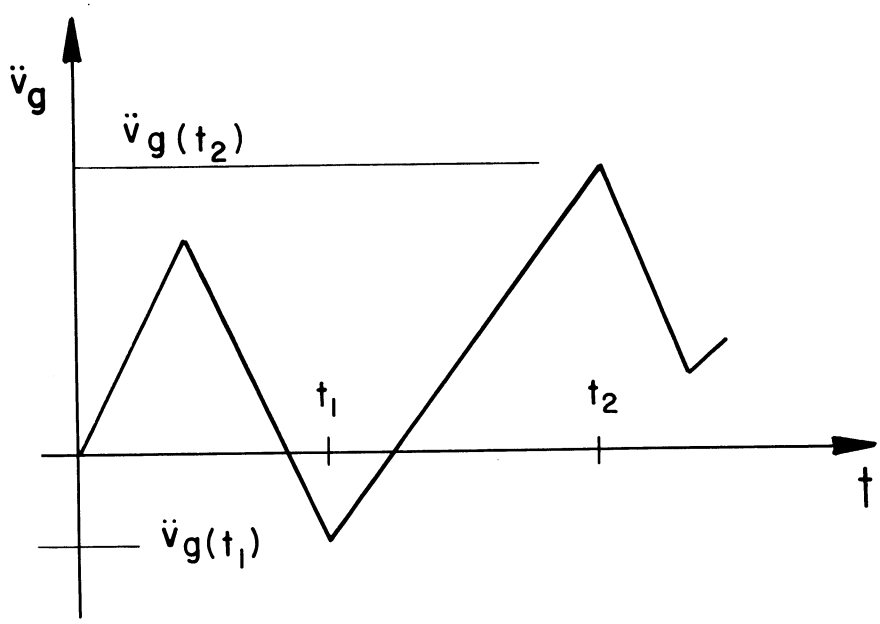

FIGURE 9 GROUND ACCELERATION

On (t_1, t_2);

$$A = v_g(t_1) \tag{3.15b}$$

$$B = \frac{\ddot{v}_g(t_2) - \ddot{v}_g(t_1)}{t_2 - t_1} \tag{3.15c}$$

Now on (t_1, t_2) equation (3.14) becomes

$$\ddot{Z}_m + 2\lambda_m W_m \dot{Z}_m + W_m^2 Z_m = P_m^* (A + Bt) \tag{3.16}$$

The solution to equation (3.16) on (t_1, t_2) is given by

$$Z_m(t) = P_m^* e^{-\lambda_m w_m t} \left\{ \left[Z_m(t_1) - \frac{A}{W_m^2} + \frac{2\lambda_m B}{W_m^3} \right] \cos W_{Dm} t \right.$$

$$\left. + \frac{1}{W_{Dm}} \left[\dot{Z}_m(t_1) + \lambda_m W_m Z_m(t_1) - \frac{\lambda_m A}{W_m} + \frac{B(2\lambda_m^2 - 1)}{W_m^2} \right] \sin W_{Dm} t \right\}$$

$$+ P_m^* \left[\frac{A}{W_m^2} - \frac{2\lambda_m B}{W_m^3} + \frac{Bt}{W_m^2} \right] \tag{3.17a}$$

where

$$W_{Dm} = W_m (1 - \lambda_m^2)^{1/2} \tag{3.17b}$$

and $Z_m(t_1)$, $\dot{Z}_m(t_1)$ are the initial conditions for this linear portion. Differentiation of equation (3.17a) gives the modal velocity

$$\dot{Z}_m(t) = P_m^* \; e^{-\lambda_m W_m t} \left\{ \left[\dot{Z}_m(t_1) - \frac{B}{W_m^2} \right] \cos W_{Dm} t \right.$$

$$\left. + \left[A - W_m^2 \, Z_m(t_1) - \lambda_m \, W_m \, (Z_m(t_1) + \frac{B}{W_m^2}) \right] \sin W_{Dm} t \right\}$$

$$+ \; P_m^* \; \frac{B}{W_m^2} \qquad (3.18)$$

At rest initial conditions are used for the first linear portion. Equations (3.17) and (3.18) are used to compute the end values which become the initial conditions for the second linear portion. Repetition gives the complete solution over the required time interval. With solutions for each mode, equation 3.8 is used to give the structure displacements $\underline{r}$ as a function of time. Member forces follow as in section 2F.

E. Spectrum Analysis

Unless actual histories of displacements and forces are required for a specific earthquake a more realistic approach is via the response spectrum. For a particular ground motion history $\ddot{v}_g(t)$, the spectrum is defined as follows.

The response of a unit mass system with damping λ, and frequency w, is governed by the equation

$$\ddot{u}(t) + 2\lambda w\,\dot{u}(t) + w^2\,u(t) = \ddot{v}_g(t) \qquad (3.19)$$

Let u_{max} be the maximum value that u(t) attains. Then, three spectral quantities are defined by

i) spectral displacement: $S_d\,(w, \lambda) \equiv u_{max}$

ii) spectral velocity: $S_v\,(w, \lambda) \equiv w\,u_{max}$

iii) spectral acceleration: $S_a\,(w, \lambda) \equiv w^2\,u_{max}$

So, for a specific earthquake, for a series of damping values, either spectral quantity may be evaluated and plotted against frequency or period. Although spectral displacement is the most directly useful, spectral acceleration is generally used as it gives a measure of effective acceleration and may be expressed as a dimensionless fraction of gravity.

Recalling equation (3.14) for the m th mode, in terms of spectral acceleration, the maximum response is given by

$$Z_m^{(max)} = \frac{P^*_m \quad S_a\,(w_m, \lambda_m)}{w_m^2} \qquad (3.20)$$

This implies a set of actual displacements

$$\underline{r}_m = Z_m^{(max)} \quad \underline{\phi}_m \qquad (3.21)$$

and a corresponding set of member forces.

The maximums in each mode will generally occur at different times. A good estimation of the maximum displacements and member forces is made by calculating the root-mean-square of the maximum modal values.

F. Computer Program Dynamic Options

The options currently available in the program are:

1. Calculation of mode shapes and periods (frequencies)
2. Response spectrum analysis for any acceleration spectrum supplied by the user with
    a. Root-Mean-Square modal combination
    b. Sum of absolute value modal combinations
3. Time history analysis for any ground motion supplied by the user.

Option 2b is supplied as a matter of interest to give an upper bound on the maximum values. Either dynamic analysis may be combined with any static load case.

4. PROGRAM APPLICATION

The effective application of a computer program for the analysis of practical structures involves a considerable amount of experience. The most difficult phase of the analysis is in the selection of the appropriate model which represents the significant structural properties of the building. The foundation is an area of particular concern. The rotational stiffness under column and shear walls can be very difficult to model. It is possible to select an extra "dummy story" in order to approximate these properties. In addition, the effective width of various structural members and the participation in bending of the floor slabs must be estimated. The most practical solution to these problems is to run several analyses in order to examine the sensitivity of these parameters and to establish their relative importance. Verification of results is another very important phase of the analysis. Static equilibrium checks are necessary not only to check the computer output but to understand the basic structural behavior of the building. The purpose of this section is to present some guidelines in these general areas.

A. Foundation Building Interaction

In recent years considerable research has been conducted in the area of foundation - structure interaction. However, very little of this work has been of direct value to the profession involved in the earthquake analysis of buildings. Several of the suggested approaches have been difficult to apply in case of complex buildings, or they have had serious theoretical restrictions.

Before foundation interaction effects are included in the analysis it is necessary to define the exact location of the earthquake input. If the design criteria states that the input is at the base of the building

then it is impossible to say that the building will modify the input, and it is impossible to include interaction effects.

A large amount of research in this area has been associated with machines vibrating on an infinite foundation where the term radiation damping has been used. This work has little value in earthquake engineering since the energy source is not at the base of the building. It is easy to show that the energy stored in the building is very small compared to the energy stored in the immediate foundation area in the case of earthquake input. Also, the machine vibration problem is a steady state phenomenon; whereas, earthquakes produce a transient loading.

The continuous foundation contains an infinite number of degrees of freedom. Therefore, any approach which suggests representing the lateral behavior of the foundation with a simple spring, dashpot and mass system is a very gross approximation. In fact, this technique can produce a filtering effect on the earthquake input and cause serious errors. For lateral earthquake input, this type of approximation is only acceptable in the representation of the rotational stiffness at the base of columns and shear walls.

The most significant factor to consider is the modification of the basic earthquake rock motion by the layers of soil material under the building [6]. For certain earthquakes and locations this may be a factor of 2 or 3 in amplification. Therefore, it is very important that the dynamic behavior of the site is studied independently of the building. The results of such a study will result in a suggested acceleration spectrum to be used in the analysis of the building. Figure 10 indicates the type of results which can be expected from such a site analysis.

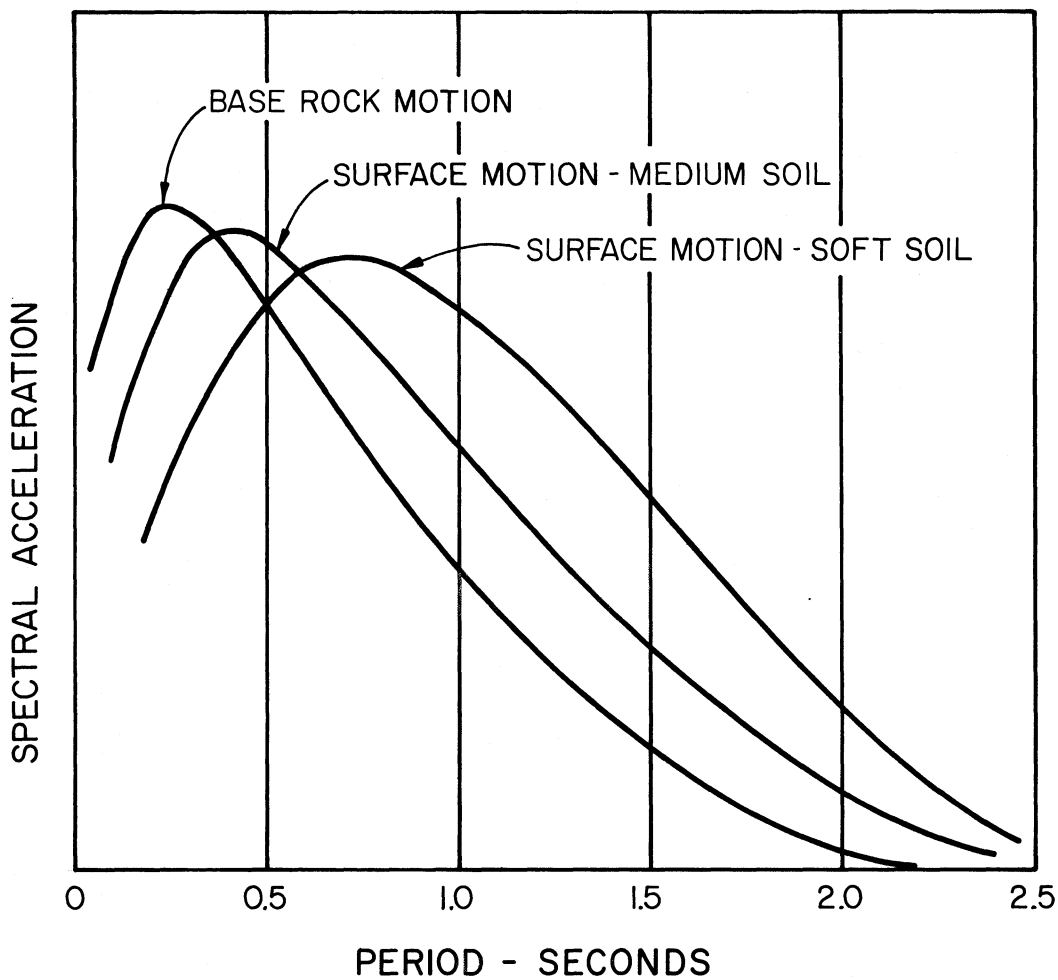

FIGURE 10 APPROXIMATE EFFECT OF SOIL CONDITIONS ON DESIGN SPECTRA (HYPOTHETICAL)

B. Vertical Earthquake Analysis

For certain types of earthquakes it has been observed that the vertical accelerations are comparable in magnitude to the lateral accelerations. However, all buildings have been designed elastically for a minimum of 1 g in the vertical direction; therefore, these additional vertical forces very often do not cause direct damage to the structure. Of course, they should be considered in the design of members in addition to the lateral earthquake loads.

For most structures the stiffness in the vertical direction is very large; hence, the vertical periods will be very small. Therefore, a dynamic analysis in the vertical direction may not be required. A direct increase in dead load stresses may be a good method to approximate the effects of vertical earthquake loads.

C. Design Spectra

The deficiencies of the present seismic design procedures are clearly summarized in reference [5]. It is apparent that the present code is a very approximate method based on the first mode only. The foundation factors discussed in the previous section are not considered. Another factor which is important in an elastic analysis is the damping factor ξ Spectra for damping of 2 and 10 percent are shown in figures [11] and [12]. It is clear that the Uniform Building Code seismic loads are very small compared to the forces produced in recorded earthquakes. It has been estimated that earthquakes of the Parkfield magnitude can be expected about once per year at some point in California, and earthquakes of the El Centro magnitude may be expected every five or six years.

The selection of a design spectra for a particular building will depend on the geographical area, the local soil condition, the type of construction material and the intended use of the building. It is

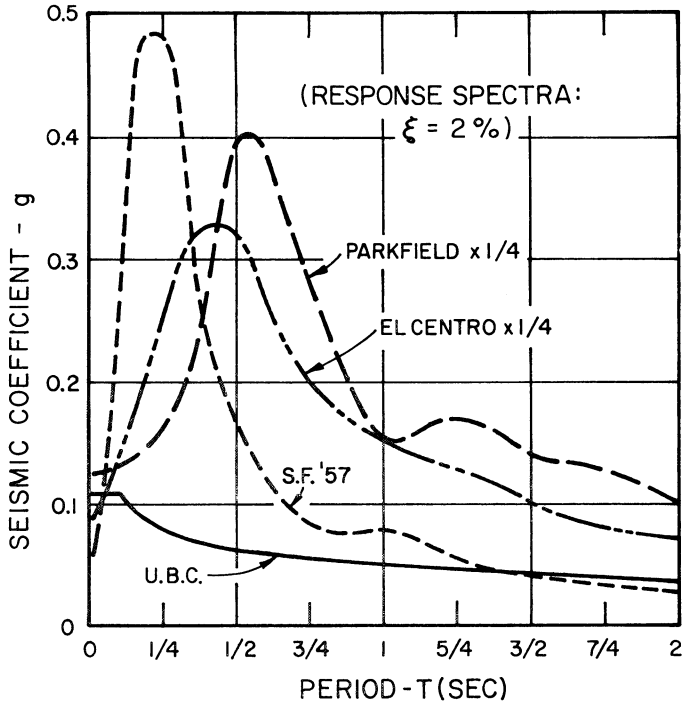

FIGURE 11 COMPARISON OF CODE WITH E.Q. RESPONSE SPECTRA

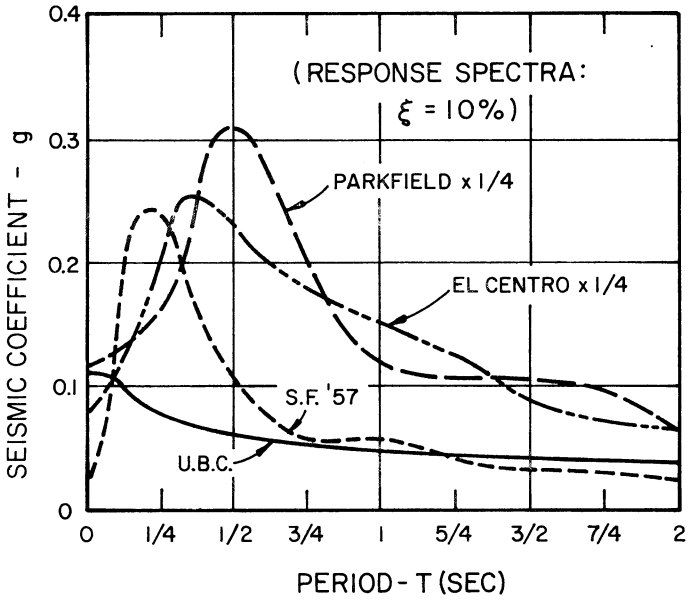

FIGURE 12 COMPARISON OF CODE WITH E.Q. RESPONSE SPECTRA

apparent that certain types of public buildings will justify a design for a large intensity earthquake. In all cases the UBC code should only be considered a minimum design criteria.

D. Special Modeling Problems

The program is restricted to frames which are basically rectangular with continuous column lines. However, if appropriate member properties are selected, frames with a complex geometry can be considered. For an example, the frame shown in figure 13 contains a massive shear wall terminated by two columns at the first level. This type of frame may be modelled in the following way.

Consider a two-bay frame with column lines A, B and C. The first level can be accurately represented. The solid wall above level one must be modelled using only a panel if continuity between the infill panel and the bounding columns is to be maintained. For program input, this implies that panel section properties be computed using areas a_1, a_2 and a_3 and the columns input on lines A and B above level one should have zero section properties.

ALSO it must be noted that the panel is not associated with the rotational degrees of freedom of the adjacent joints. Therefore it is necessary to supply massive beams at levels 1, 2 and 3 in bay AB to force the rotations of these joints to be consistent with overall wall displacements and so produce accurate moments in the beams of bay BC, and the first level columns A and B.

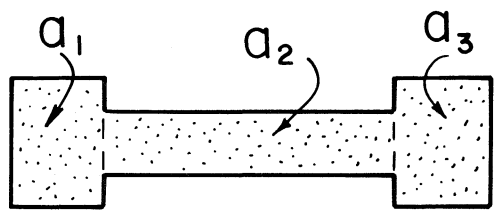

SECTION-S

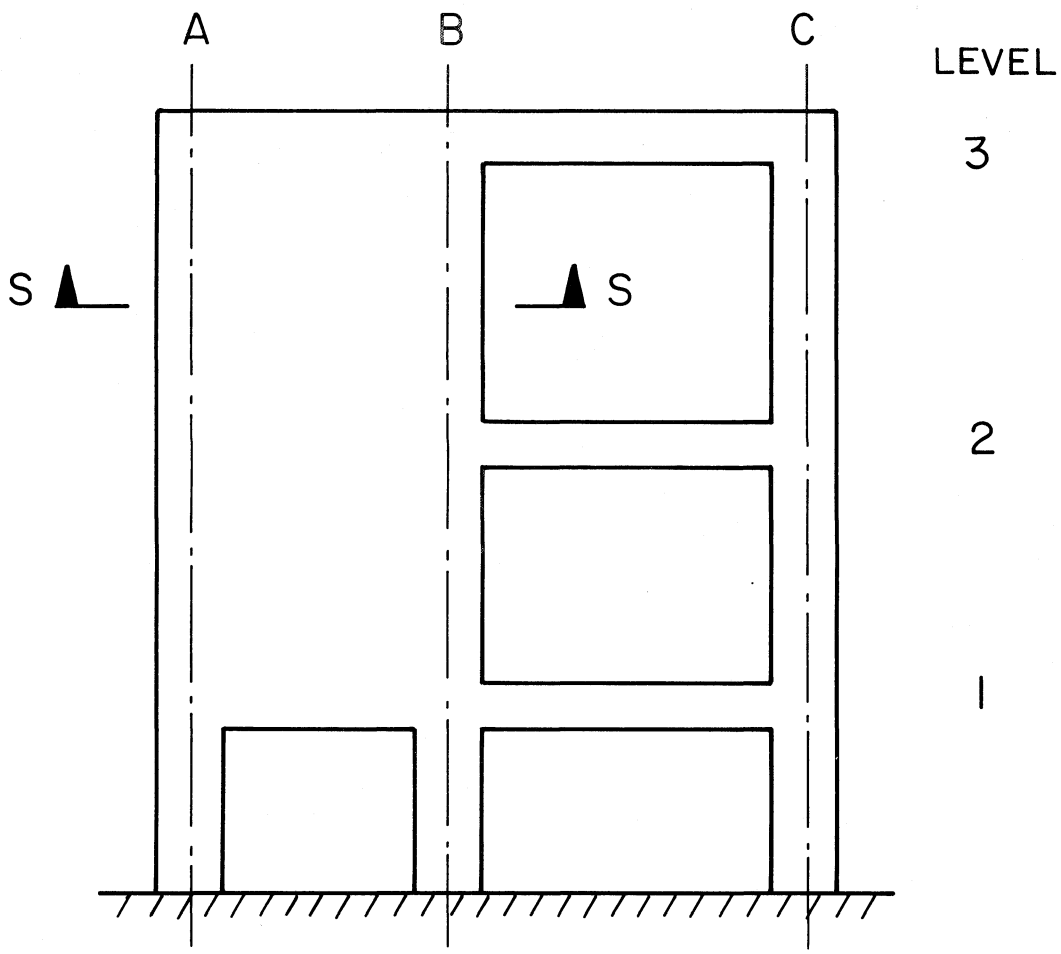

FIGURE 13 MODEL OF SHEAR WALL TERMINATED ON TWO COLUMNS

E. Static Checks

Results from a dynamic spectrum analysis will not satisfy statics since the method involves the summation of absolute values of individual analyses. All static load conditions must satisfy statics. Because of the consideration of finite-size members and the rigid-floor approximation, the evaluation of joint equilibrium is not a simple procedure. Figure 14 illustrates the result of a static load analysis on a joint of finite size. It is necessary to include the member shears in the moment equilibrium equation because of the finite size of the joint. Note that all horizontal forces are transferred at the floor level and not at the center of the beams. This is also the level where external loads are applied,and the story mass is lumped.

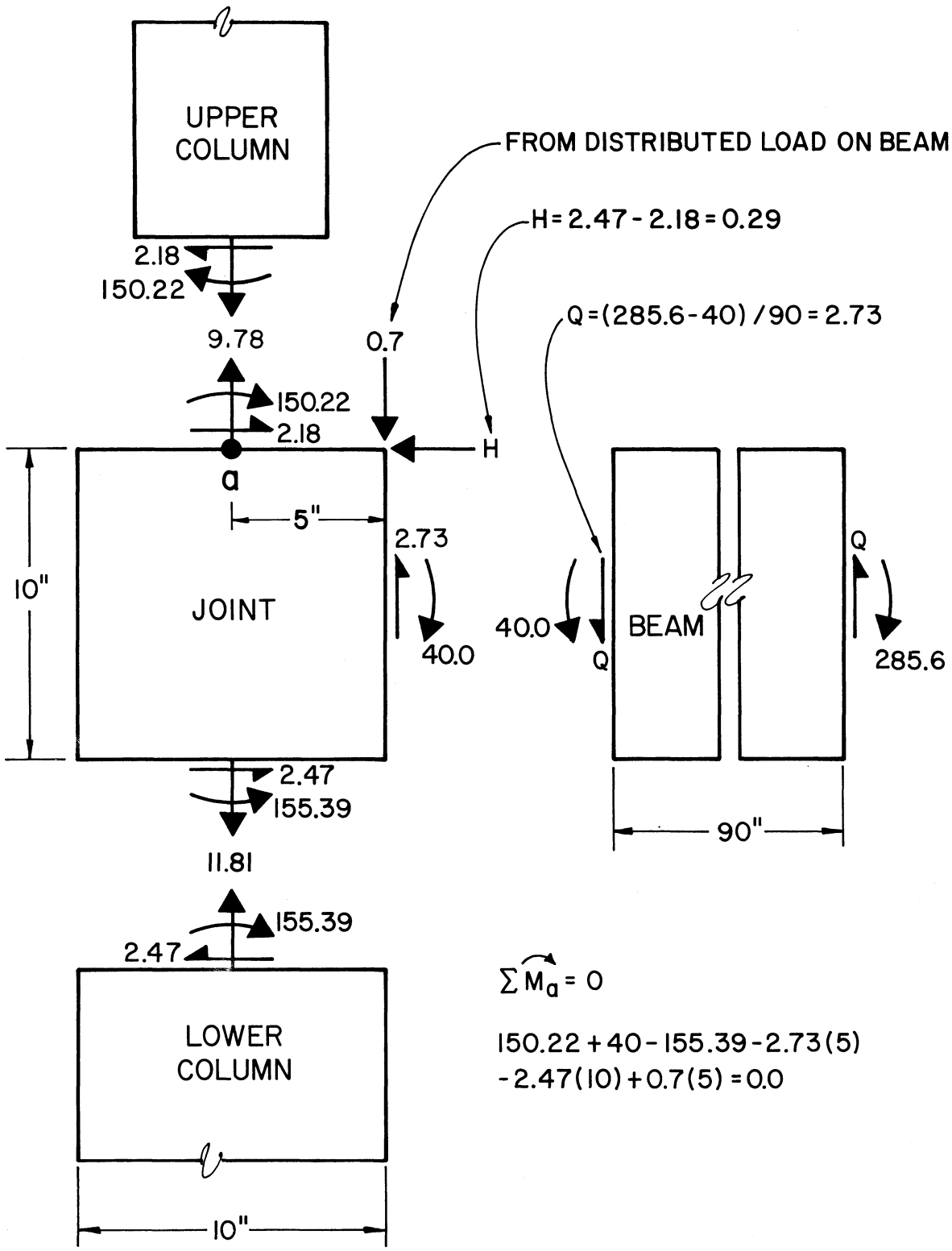

$\sum M_a = 0$

$150.22 + 40 - 155.39 - 2.73(5) - 2.47(10) + 0.7(5) = 0.0$

FIGURE 14 EQUILIBRIUM CHECK OF TYPICAL JOINT

5. FINAL REMARKS

A general computer program for the elastic three-dimensional static and dynamic analysis of frame and shear wall buildings has been presented. For buildings which can be approximated by independent frames and shear walls the program is very economical and easy to use as compared to a general purpose three-dimensional structural analysis program.

In this report an option has been added to the computer program to evaluate the time-dependent displacements and stresses within the building due to ground time history acceleration input. At the present time the value of such an analysis for most buildings is not justifiable since the selection of a "design earthquake" is much more difficult than the selection of a design spectrum. Also, an upper bound on such an analysis can be determined by the utilization of the direct summation option in the spectrum analysis.

It is apparent that if nonlinear effects are to be considered a step-by-step response analysis is required; however, this involves a significant increase in computational effort and will be justified for only a limited number of buildings. In addition, the nonlinear material properties both for most structural and non-structural members have not been established accurately from experimental work.

6. REFERENCES

1. "Structural Analysis of Multistory Buildings," by R. W. Clough, I. P. King and E. L. Wilson, ASCE Journal of the Structural Division, August 1963.

2. "Inelastic Earthquake Response of Tall Buildings," by R. W. Clough, K. L. Bunuska and E. L. Wilson, 3rd World Conference on Earthquake Engineering, New Zealand, January 1965.

3. "LATERAL - A Computer Program for the Three Dimensional Analysis of Multistory Frame and Shear Wall Buildings," A report by Engineering Analysis Corporation.

4. "SOLID SAP - A Static Analysis Program for Three Dimensional Solid Structures," by E. L. Wilson, University of California Structural Engineering Laboratory Report No. UC-SESM 71-19, March 1970.

5. "Deficiencies in Current Seismic Design Procedures," by R. W. Clough, Civil Engineering Frontiers In Enviromental Technology," A Program of Public Lecture to Commenorate the Dedication of Raymond E. Davis Hall, Department of Civil Engineering, University of California, October 1969.

6. "Influence of Local Soil Conditions on Building Damage Potential During Earthquake," by H. Bolton Seed and I. M. Idriss, Earthquake Engineering Research Center Report No. EERC 69-15 University of California, December 1969.

7. "Static and Earthquake Analysis of Three-Dimensional Frame and Shear Wall Building", by E. L. Wilson and H. H. Dovey, Report No. EERC 72-2 May 1972.

Appendix A

Description of Input Data

THREE-DIMENSIONAL ANALYSIS OF BUILDING SYSTEMS - TABS

A. Numerical Definition of the Building

For the purpose of preparing numerical input to the computer program, the building must be separated into a system of planar frames or isolated shear walls. A plan view of a typical building is shown in Figure A1.

The center of mass for each story level must be calculated and supplied by the user. The location of the reference point (origin of global X,Y coordinates) is arbitrary and must be selected by the user; the reference point is the same for all story levels. Note that the line of action of the earthquake force resultant acts through the center of mass at each story level.

Each frame or shear wall element is assumed to have stiffness in only one (1) direction, "ℓ". Elements which also have stiffness in another direction must be defined by an additional element. For example, the properties of columns which are common to different frames must be supplied twice; the axial deformations in these double defined columns will not be the same (compatible), and it should be noted that this is one of the basic approximations of the analysis used in the program. For tall structures (over twenty stories), incompatible corner column axial deformations will cause the structure to be more flexible. However, for design purposes, the axial forces may be added directly to give reasonable results for the short building.

The properties of a frame or shear wall are given with respect to its local stiffness direction, "ℓ" ; a typical frame/shear wall element is shown in Figure A2. Floor levels and column centerlines are the basic reference lines used in the frame description. Floor levels are the same

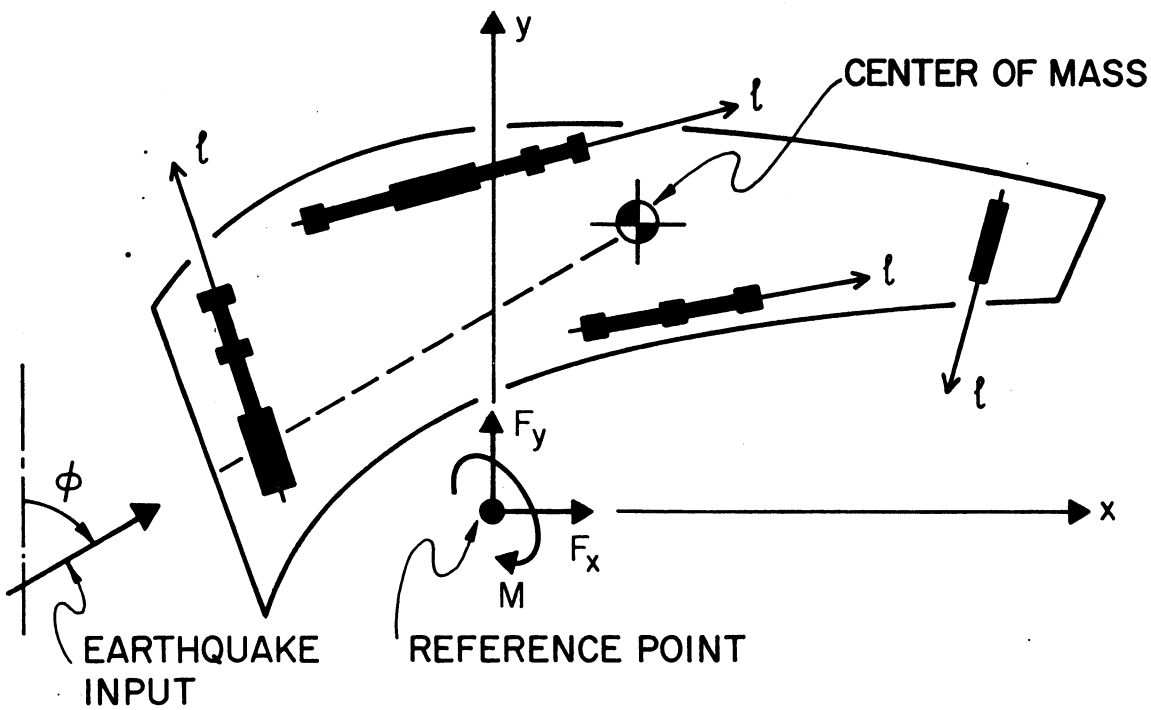

FIGURE A1 PLAN VIEW (TYPICAL BUILDING)

for all frames. All lateral loads are applied at the floor levels and act on the complete structure. Columns may be omitted by specifying zero properties for the member. Bending stiffness of the beams (girders) may be neglected also. However, axial beam areas do not enter the stiffness calculations because all frames at a given floor level are assumed to be connected by a floor diaphragm which is rigid in its own plane.

Deformations within joints (shaded areas in Figure A2) are neglected. The effective length of a beam is reduced by the half-width of the column below. The height of a column is reduced by the average depth of the girders on either side of the column.

Columns must be prismatic; however, shearing and axial deformations are included. Beams need not be prismatic but must be symmetrical about their vertical mid-plane--only stiffness and carry-over factors are given. Shearing deformation may be considered by appropriate modification to the stiffness factors.

B. Summary of Input Data

Ordering of a complete data deck with all of TABS options is shown here.

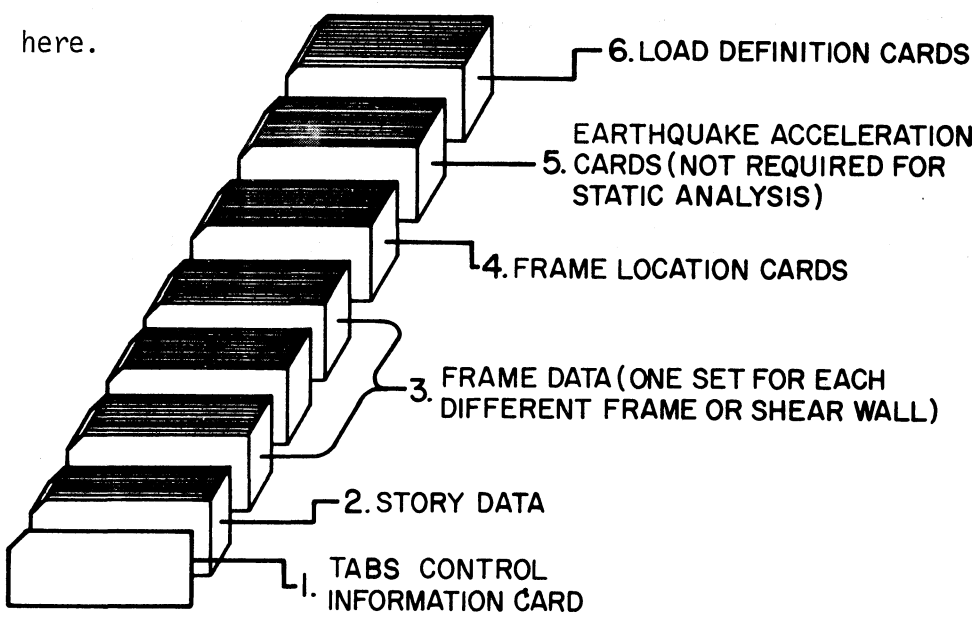

ORDERING OF TABS DATA DECK

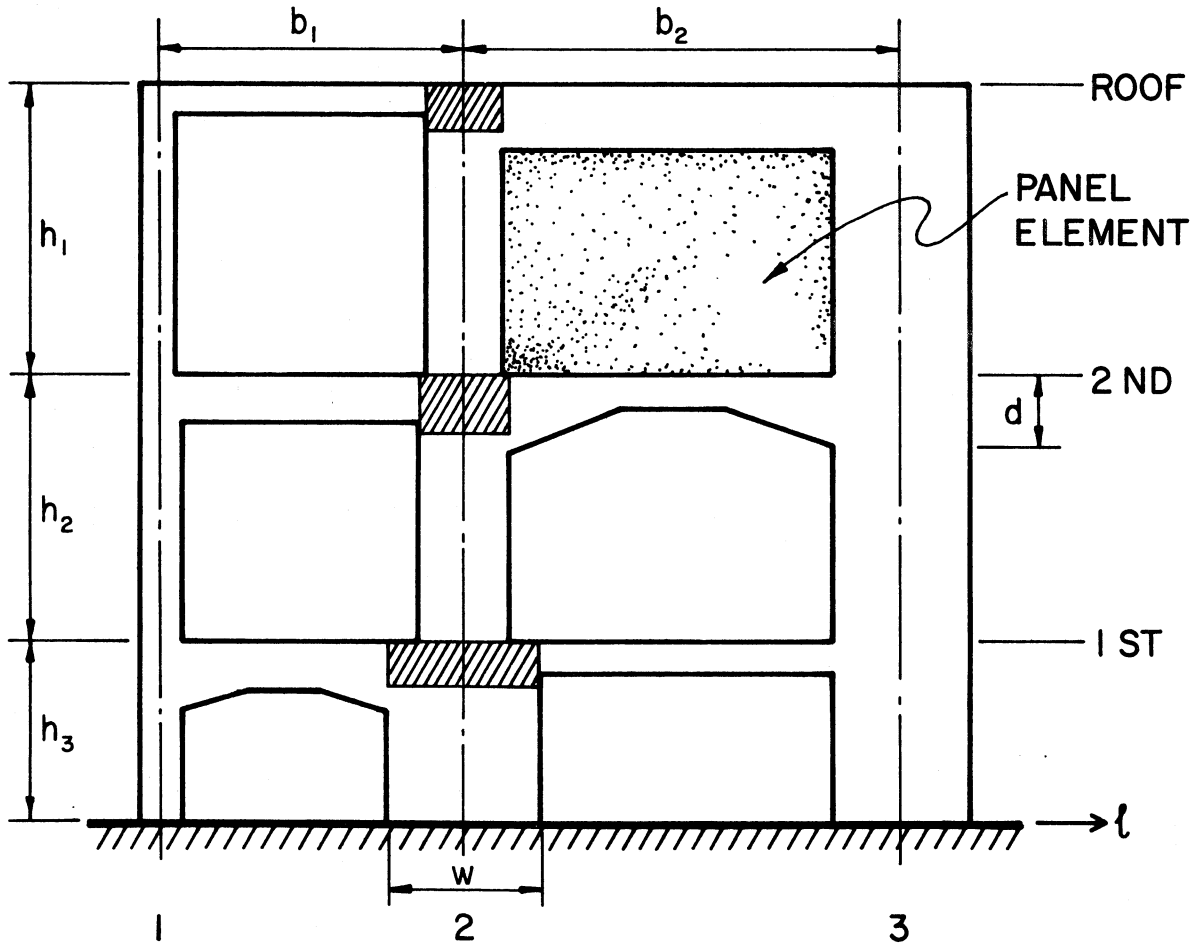

FIGURE A2 ELEVATION VIEW (TYPICAL FRAME)

C. Input Data

1. CONTROL INFORMATION CARD (7I5,9A5)

Columns	Note*	Entry
1 - 5		Number of stories in the complete building (not including the footing line)
6 - 10	(1)	Number of frames with different properties or different vertical loading
11 - 15	(1)	Total number of frame or shear wall elements in the structure
16 - 20	(2)	Total number of load conditions
21 - 25	(3)	Analysis type code: EQ.0; Static loads only EQ.1; Mode shapes and frequencies only EQ.2; Static load analysis + mode shapes and frequencies EQ.3; Lateral earthquake spectrum in addition to analysis type 2, above EQ.4; Lateral earthquake response in addition to analysis type 2, above.
26 - 30	(4)	Number of frequencies to be calculated
31 - 35	(5)	Allowable story degrees of freedom: EQ.0; X,Y translations + story rotations EQ.1; X translation only } for symmetrical bldgs. only EQ.2; Y translation only } for symmetrical bldgs. only
36 - 80		Building identification information to be printed with the output

[*See next section for notes.]

2. STORY DATA - Prepare two (2) cards per story level; data is entered in sequence from top to bottom of the structure.

First Card (A5, I5, 7F10.0)

Columns	Note	Entry
1 - 5		Five characters to be used for level identification
6 - 10		Blank
11 - 20		Story height [distance from the floor (or roof) level to the floor (or foundation) level below]

21 - 30	(6)	Translational mass
31 - 40	(6)	Rotational mass moment of inertia about a vertical axis through the center of mass
41 - 50	(7)	X-distance to the center of mass measured from the reference point
51 - 60	(7)	Y-distance to the center of mass measured from the reference point
61 - 70	(8)	External story stiffness in the X-direction
71 - 80	(8)	External story stiffness in the Y-direction

<u>Second Card</u> (8F10.0)

Columns	Note	Entry
1 - 10		Fx_A load for lateral load case A
11 - 20		Fy_A load for lateral load case A
21 - 30		X_A; X-ordinate at the point of load application for load case A
31 - 40		Y_A; Y-ordinate at the point of load application for load case A
41 - 50		Fx_B load for lateral load case B
51 - 60		Fy_B load for lateral load case B
61 - 70		X_B; X-ordinate at the point of load application for load case B
71 - 80		Y_B; Y-ordinate at the point of load application for load case B

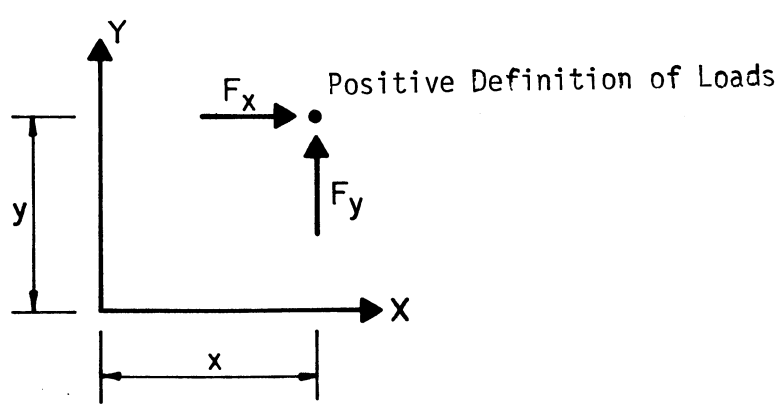

3. FRAME DATA - One set of data must be entered for each different frame. Frames with different locations but with identical properties and vertical loadings need by entered only once.

a. Frame Control Card (7I5,9A5)

Columns	Note	Entry
1 - 5	(9)	Frame identification number
6 - 10	(10)	Number of vertical column lines in this frame
11 - 15	(11)	Number of story levels above the foundation level
16 - 20	(12)	Number of sets of different column properties
21 - 25	(13)	Number of sets of different beam (girder) properties
26 - 30	(14)	Number of sets of different fixed-end moments and shears to be applied as vertical loads to beams (girders)
31 - 35	(15)	Number of panel elements in this frame
36 - 80		Label information to be used to identify this frame type

b. Bay Width Data (8F10.0)

Skip this section of the input if the number of column lines in this frame is one (1).

Columns	Note	Entry
1 - 10	(16)	Bay width between column lines 1 and 2
11 - 20		Bay width between column lines 2 and 3
. . .	. . .	. . .
71 - 80		Bay width between column lines 7 and 8

c. Column Property Cards (I5,F15.0,3F10.0)

One card must be supplied in this section for each different column in this frame.

Columns	Note	Entry
1 - 5	(17)	Identification number for this column property set
6 - 20		Modulus of elasticity, E
21 - 30		Cross sectional area, A

31 - 40		Moment of inertia, I
41 - 50		Effective shear area, A_v
51 - 60	(18)	Column width, w

d. <u>Beam Property Cards</u> (I5,F15.0,3F10.0)

One card must be supplied in this section for each different beam in the frame; skip this input if the frame has only one column line.

Columns	Note	Entry
1 - 5	(19)	Identification number for this beam property set
6 - 20		Modulus of elasticity, E
21 - 30		Moment of inertia at midspan, I_o
31 - 40		Stiffness factor (equals 4 for a prismatic beam), K_1
41 - 50		Carry over factor (equals 0.5 for a prismatic beam), C_1
51 - 60	(20)	Beam depth, d

Data entries referenced above are defined in the following sketch:

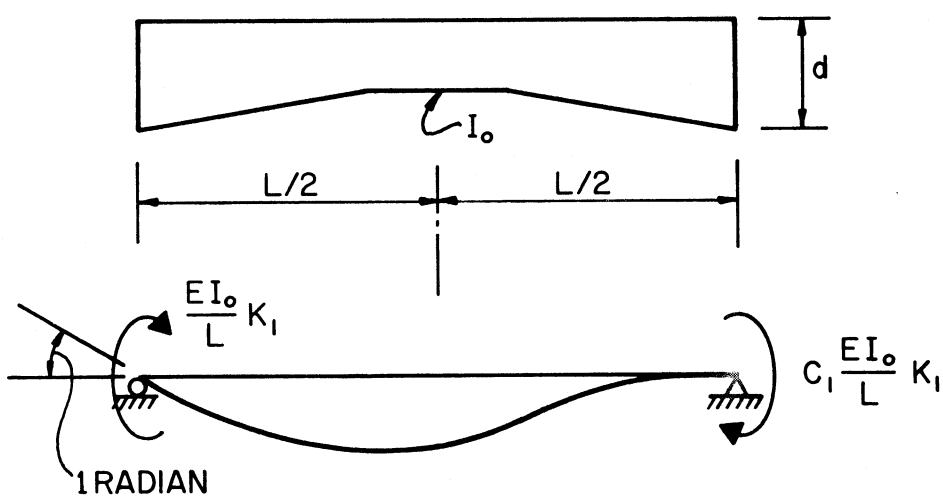

e. Fixed-End Beam Loads (2I5,5F10.0)

One card must be supplied for each different type of vertical beam loading; omit these data if this is a single column line frame.

Columns	Note	Entry
1 - 5	(21)	Identification number for this vertical loading set
6 - 10		Input code: EQ.0; Fixed-end forces are applied at the column faces EQ.1; Fixed-end forces are applied at the column centerlines
11 - 20	(22)	Fixed-end reaction, M_1
21 - 30		Fixed-end reaction, V_1
31 - 40		Fixed-end reaction, M_2
41 - 50		Fixed-end reaction, V_2
51 - 60	(23)	Uniform force per unit length, w, acting downward to be added to fixed-end reactions

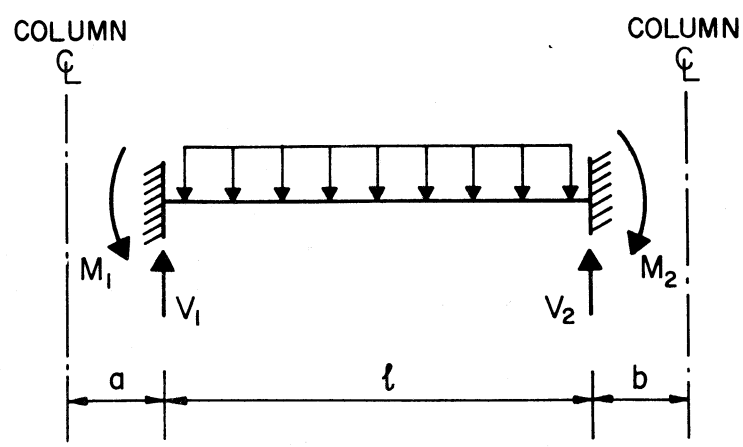

f. Beam Cards (5I5)

One card per girder must be input from top to bottom and from left to right in the frame (unless the data generation option is used). This section of data must be omitted entirely for single column line frames.

Columns	Note	Entry
1 - 5	(24)	Beam property set identification number for this girder
6 - 10	(25)	Number of beams in sequence below to be generated having the same properties and vertical loading as this beam
11 - 15	(26)	Vertical loading set identification number for vertical load case I
16 - 20		Vertical loading set identification number for vertical load case II
21 - 25		Vertical loading set identification number for vertical load case III

g. Column Cards (2I5)

One card per column must be input from top to bottom and from left to right of the frame (unless the data generation option is used).

Columns	Note	Entry
1 - 5	(27)	Column property set identification number
6 - 10	(28)	Number of columns in sequence below to be generated having the same properties as this column member

h. Panel Element Cards (2I5,5F10.0)

Enter one card per panel in any order; no generation is allowed.

Columns	Note	Entry
1 - 5	(29)	Level identification number at the top of this panel
6 - 10		Column line number at the left side of this panel
11 - 20		Modulus of Elasticity, E
21 - 30		Cross section of area, A
31 - 40		Moment of inertia, I
41 - 50		Effective shear area, Av
51 - 60		Shear modulus, G

4. FRAME LOCATION CARDS (2I5,4F10.0,4A5)

One card must be entered in this section for each frame (or single column) in the building; the total number of frame locations to be read is controlled by the entry in card columns 11-15 of the CONTROL INFORMATION CARD, section 1, above.

Columns	Note	Entry
1 - 5	(30)	Frame identification number
6 - 10	(31)	Force calculation code: EQ.0; frame forces will be calculated and printed EQ.1; frame forces will not be calculated
11 - 20	(32)	Distance, X_1
21 - 30		Distance, Y_1
31 - 40		Distance, X_2
41 - 50		Distance, Y_2
51 - 70		Information to be printed with the output which will identify this particular frame

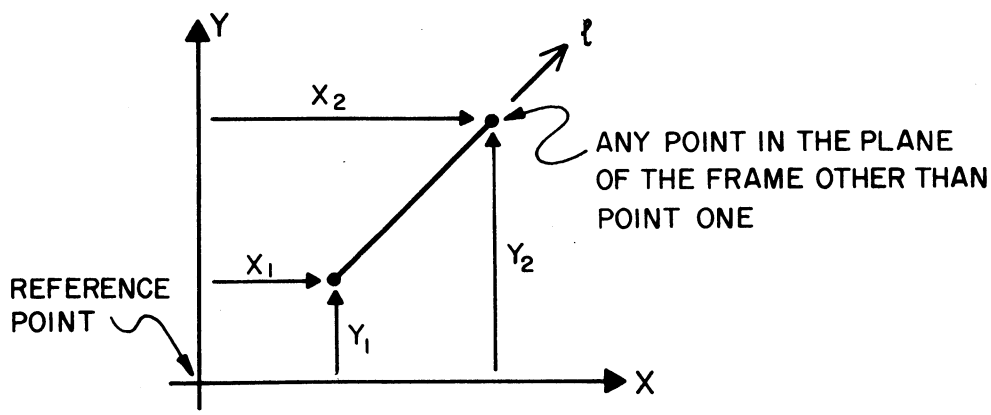

5A. EARTHQUAKE ACCELERATION SPECTRUM CARDS

These data cards are required only if the analysis type code was set equal to three (3); see section 1, above.

a. Control Card (I5,5X,2F10.0,10A5)

Columns	Note	Entry
1 - 5		Number of period cards used to define the acceleration spectrum
11 - 20		Scale factor for accelerations
21 - 30	(33)	Direction of earthquake input, ϕ
31 - 80		User information to be printed with output

b. Period Cards (2F10.0)

1 - 10	Period entered in increasing numerical sequence
11 - 20	Spectrum acceleration

5B. TIME HISTORY CARDS

These data cards are required only if the analysis type code was set equal to four (4); See Section 1 above.

a) Control Card (2I5,3F10.0,10A4)

Columns	Note	Entry
1 - 5		Number of acceleration cards (see c below)
6 - 10	(36)	Number of time steps to be used in the analysis
11 - 20		Scale factor for accelerations
21 - 30	(33)	Direction of earthquake input, ϕ
31 - 40		Time increment Δt, for print of results (see columns 6-10 above)
41 - 80		User information to be printed with output.

b) Damping Cards (I5,F10.2)

One card must be supplied for each frequency in the analysis (see note 4)

Columns	Note	Entry
1 - 5	(4)	Mode number (in ascending order)
6 - 15		Damping ratio: Modal Damping/Critical Damping

c) Acceleration Cards (2F10.0)

One card must be supplied for each time point, at which ground acceleration is specified, in increasing time order. The time span must be greater than the number of time steps times Δt.

Columns	Note	Entry
1 - 10		Time
11 - 20		Ground acceleration

6. LOAD CASE DEFINITION CARDS (8F10.0)

Load cases for the complete building are defined as a combination of vertical conditions (I, II and III), lateral loading conditions (A and B), and earthquake spectrum loadings. One card must be entered in this section for each different building load case; the total number of building load cases is controlled by the entry in card columns 16-20 of the CONTROL INFORMATION CARD given in section 1, above. These data cards should not be supplied if the analysis type code was set equal to one (1); see section 1, above.

Columns	Note	Entry	
1 - 10		Multiplier for vertical load case I	
11 - 20		Multiplier for vertical load case II	
21 - 30		Multiplier for vertical load case III	
31 - 40		Multiplier for lateral load case A	
41 - 50		Multiplier for lateral load case B	
51 - 60	(34)	Multiplier for spectrum-1 loading	[See 5A]
61 - 70	(34)	Multiplier for spectrum-2 loading	[See 5A]
71 - 80	(35)	Multiplier for earthquake response	[See 5B]

D. Notes

(1) Input data for frames with identical properties and vertical loading are given only once--see section 4, FRAME LOCATION CARDS.

(2) Load conditions are defined as combinations of the seven (7) basic load cases--see section 5, LOAD CASE DEFINITION CARDS.

(3) Mass properties of the structure are not required for analysis type "0".

(4) The number of frequencies must be less than the number of stories times the number of degrees of freedom per story.

(5) For symmetrical buildings, the capacity and speed of solution of the program is improved if the story rotation is set to zero; i.e., "1" or "2" in card column 35.

(6) The translational mass has units of force divided by acceleration (W/g). The rotational mass moment of inertia is not required if the allowable story degrees of freedom do not include rotation. Mass properties need not be supplied if this data case is for static loading only.

(7) The location of the center of mass (X_m,Y_m) need not be given if this data case is for static loads only.

(8) The external story stiffnesses act on lines through the center of mass. These stiffnesses can be used to represent restraints (or braces) at the story level or can be used to represent soil stiffness below the ground level.

(9) Frame identification numbers must be entered in numerical sequence, beginning with number one (1). This frame may be located (repeated) at different positions in the structure.

(10) An isolated shear wall is a single column line frame. For this case all data pertaining to beams (girders) is meaningless and must be omitted in the data input section to follow below.

(11) If a frame does not extend the full height of the building, then only those story levels actually existing in the frame are input below.

(12) Column properties may be referenced to any number of columns in the frame.

(13) The number of beam property sets controls the number of cards to be read in section 3.d, below.

(14) If no vertical (static loads act on the structure, then omit this number, and skip section 3.e, below.

(15) If no panel elements are included in this frame, then omit this entry, and skip section 3.h, below.

(16) The bay width is the center-to-center distance between adjacent column lines; see Figure 2. Bay widths are input from left to right as one views the frame in elevation. The column line numbers increase in the positive "ℓ" direction, where "ℓ" is directed from the viewer's left to his right. Input as many cards in this section as are required to define all bays in this frame, eight (8) bay widths per card.

(17) Property set identification numbers must be in increasing numerical sequence beginning with one (1).

(18) The column width is used to reduce the effective length of the girders connecting to the column. For single column line frames (shear wall) the column width is not used.

(19) Property set identification numbers must be input in increasing numerical sequence beginning with one (1).

(20) The beam depth, d, is used to shorten the effective length of columns below the member.

(21) Load set numbers must be input in sequence.

(22) Reactions act on the beam ends and are positive as shown in the sketch.

(23) Additional fixed-end forces due to the uniform load. w, are calculated using:

$$M = w\ell^2/12; \quad V = w\ell/2$$

and are added to any specified fixed-end reactions. The forces due to w are exact only for prismatic beams.

(24) Beams with zero (0) stiffness (missing girders) may be input as having a property set number of zero; if the beam has finite stiffness, the set number must reference an existing property set defined previously in section 3.d, above.

(25) The generation option can only be used to define girders within the current bay; a new bay must be started with a new beam card.

(26) The vertical loading sets defined in section 3.e, above, are applied to the girders via the references in card columns 11 - 25. Three (3) independent vertical load distributions (I, II and III) are allowed, and these distributions are combined with the lateral load cases (A and B) and the earthquake spectrum analysis to form load cases for the complete building; see section 6, below.

(27) Missing columns may be input as having a property set number of zero (0); if the column has finite stiffness, then the set number referenced must correspond to one of the property sets defined previously in section 3.c, above.

(28) Generation is allowed only within the current column line; begin a new column line with a new column card.

(29) The foundation line is defined as level zero, and the roof level number is equal to the total number of stories in the building.

(30) Frame identification numbers may be repeated, but location cards must be input in frame identification number sequence.

(31) A frame force calculation code of one (1) will suppress output for the frame.

(32) The (X,Y) ordinates of points one (1) and two (2) are with respect to the reference point; points 1 and 2 define the plane of the frame (as shown in the sketch) and can be any two points in this plane. The direction 1-2 defines the positive sign for output of displacements and forces.

(33) The angle "ϕ" is measured positively clockwise between the global Y-direction and the line of action of the earthquake direction; see Figure A1.

(34) Two different spectrum analysis options are available. In the first (spectrum-1), modal forces are combined by the Root Mean Square method. In the second (spectrum-2), modal forces are combined by taking the sum of the absolute values.

(35) Multiples should be specified either for spectrum analysis or for earthquake response analysis as specified in section 1, CONTROL INFORMATION CARD as only one of these analysis types may be performed in a single program execution.

(36) The total time span of the computed response is equal to the number of time steps multiplied by the time increment (Δt). Output is given at each time step. Since explicit integration is used in computing the response, numerical instability problems are never encountered and the time increment may be any desired sampling value.

E. OUTPUT FROM THE PROGRAM

In addition to a print-out of all input data, the following output is given by the program:

1. For the complete building.
   a) Story displacements for load cases I, II, III, A and B. (Not given for analysis type code equal to one (1)).
   b) Structure mode shapes and periods. (Not given for analysis type code equal to zero (0)).
2. For each frame (note that for individual frames, the following output may be suppressed).
   a) Lateral frame displacements for each overall building load case.
   b) Member forces for each overall building load case. (Sign convention is defined below).
   c) Story shear at each level of the frame for load cases I, II, III, A and B.
3. Member Force Sign Convention. Figure A-3 shows positive forces on the different elements.

F. PROGRAM CAPACITY

The program is written in FORTRAN IV with dynamic storage allocation for major arrays in blank COMMON. Thus the amount of high speed storage required for a particular problem may be changed by altering the following two cards at the beginning of the main program;

```
COMMON A (n)
MTOT = n
```

For a given building the value of n required is computed

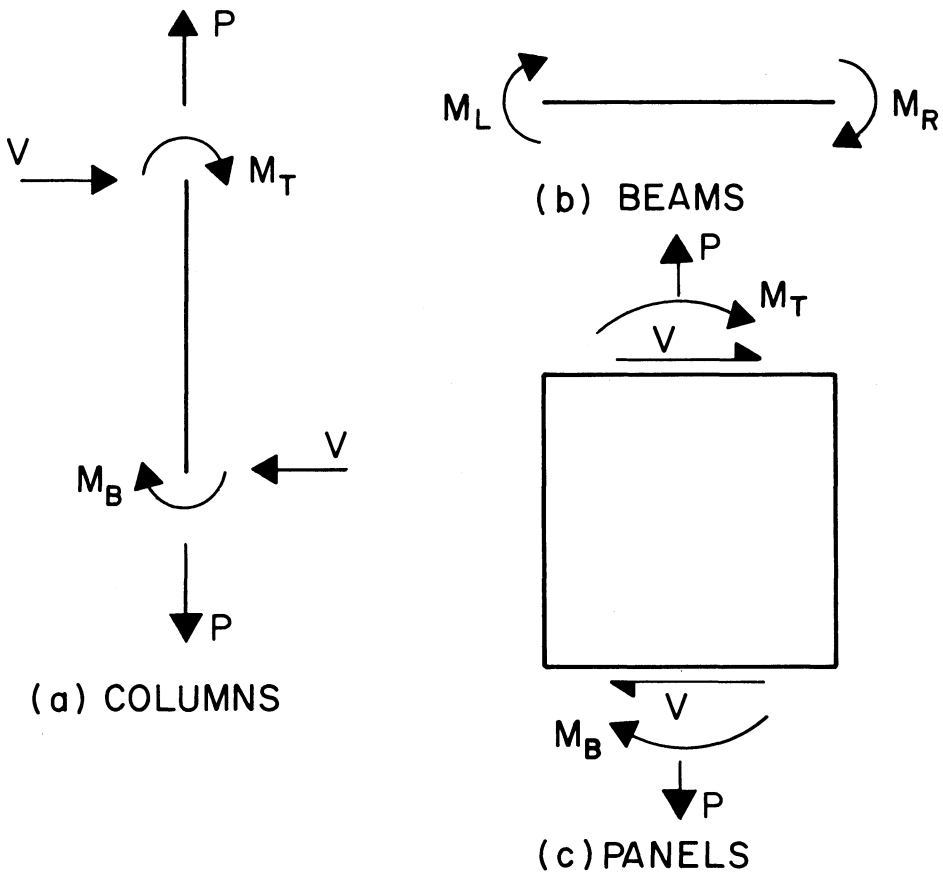

FIGURE A3 SIGN CONVENTIONS FOR MEMBER FORCES

as follows.

1. For each frame, calculate

$$N_f = 14 * NST + NS * (4 * NB + NC) + NN * (NN + 3)$$
$$+ 5 * (NBP + NCP + 2) + 8 * NFEF + 7 * NPAN + NB$$

where, NST = number of stories in the building

NS = number of stories in this frame

NC = number of column lines in this frame

NB = number of bays in this frame (equal to NC - 1)

NN = 4 * NC + NS + 1

NBP = number of beam property sets in this frame

NCP = number of column property sets in this frame

NFEF = number of fixed end force sets in this frame

NPAN = number of panel elements in this frame

2. For the complete building, calculate

$$N_b = 8 * NST + NSS * (2 * NSS + 3)$$

where NSS = 3 * NST if three degrees of freedom per story are allowed in the analysis.

= NST if only one degree of freedom per story is allowed in the analysis.

3. If a dynamic response analysis is required, calculate

$$Nd = 8 * NST + (5 + NTIME) * (NSS + NST)$$
$$+ NTF * (9 + NST)$$

where NTIME = number of times that output is required from the response analysis.

NTF = total number of frames in the building

The minimum value required for n is the maximum of the set of values of N_f, N_b and N_d

For typical buildings, N_f will usually govern if only one degree of freedom per story is allowed in the analysis but N_b may be the critical value if three degrees of freedom per story are allowed. N_d may be critical if a large number of output times are required.

Appendix B

Internal Organization of Program

The program is divided into the following five major parts (subroutine organization is shown in figure B1):

1. The first operation performed by the program is to read the basic control information and the data associated with the complete building (subroutine TABI)
2. The next operation involves the formation of lateral stiffness for each different frame and shear wall in the building. The lateral stiffness and backsubstitution equations are stored sequentially on tapes (subroutine TABF)
3. The frame location cards are then read and the total stiffness of the complete building is formed (subroutine TABL)
4. The system is solved for one or two of the following conditions:
   a. The static vertical loads, I, II and III and the lateral loads A and B are applied (subroutine TABQ)
   b. The three-dimensional mode shapes and frequencies are evaluated. The earthquake acceleration spectra is read and the maximum story displacements associated with each mode shapes are calculated (subroutine TABE)
   c. Earthquake ground motion is read and the structure displacements are computed for each time step (subroutine TABDY)
5. The load case definition cards are read and the total story displacements are evaluated. For each frame in the structure the lateral displacement are evaluated and joint displacements calculated by backsubstituting for each static load displacement and each modal spectral displacement or response time increment. As these frame displacements are determined the member forces are also evaluated and are combined according to the load case definition cards. The

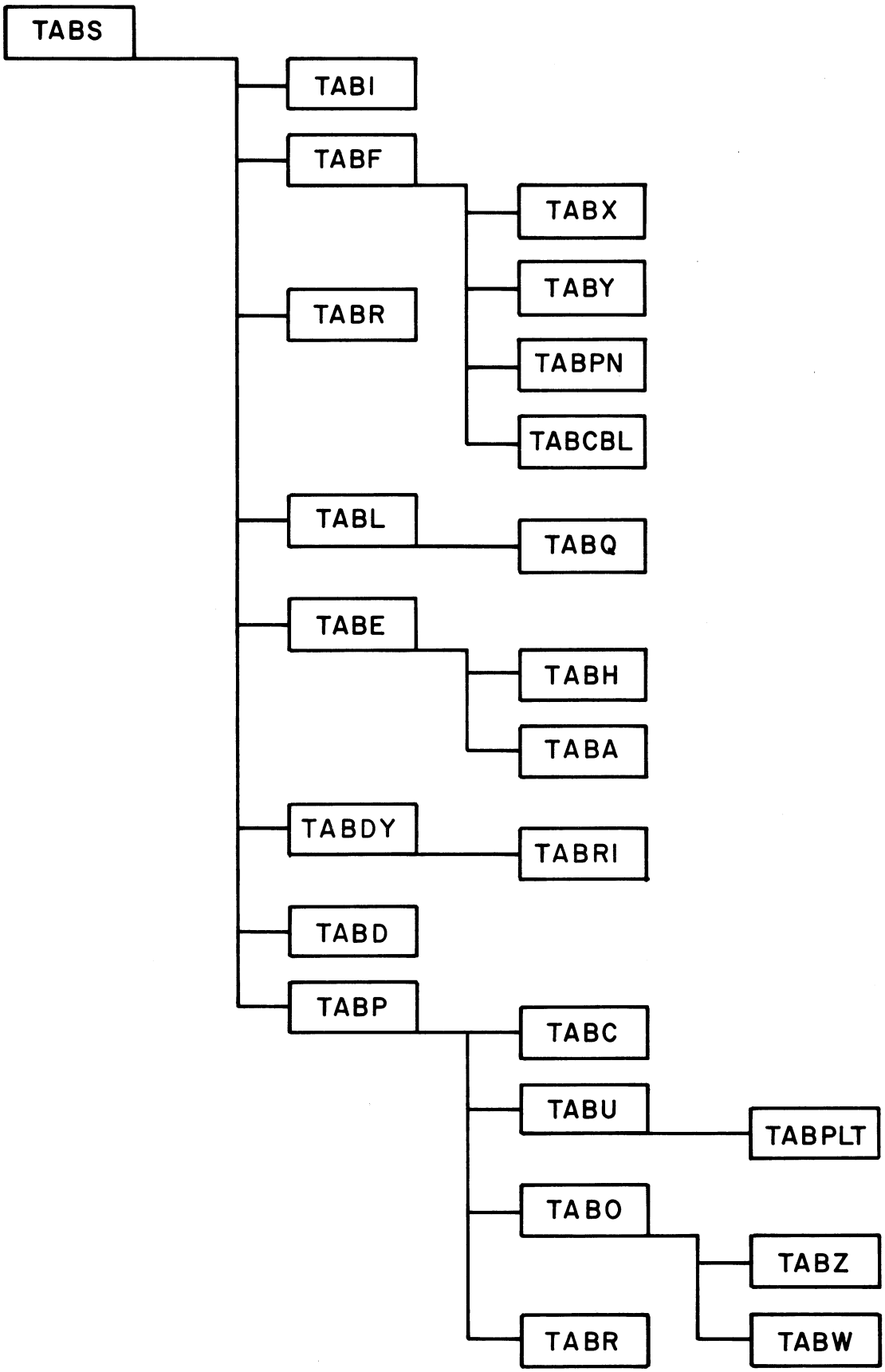

FIGURE B1 PROGRAM ORGANIZATION

root-mean-square or the direct summation is conducted at the member force level (subroutine TABD, TABP)

Appendix C

FORTRAN IV Listing Of Program

```
      PROGRAM    TABS(INPUT,OUTPUT,TAPE5=INPUT,TAPE6=OUTPUT,TAPE1,
     1               TAPE2,TAPE3)
C
C     A GENERAL PROGRAM FOR THE STATIC AND DYNAMIC ANALYSIS OF FRAME
C     AND SHEAR WALL THREE-DIMENSIONAL BUILDINGS--- E WILSON AND H DOVEY
C     8 MARCH 1972---UCB.
C     MODIFIED AUGUST 72 TO INCLUDE RESPONSE ANALYSIS OPTION
C
      COMMON/GEN/ NST,NDF,NTF,NLD,NAT,NFQ,NSD,BHED(9),FHED(9),NSS,I3,IS
     1            ,RLAB(3)
      DATA RLAB /4H  X ,4H  Y ,4HROTN /
      DIMENSION T(6)
      COMMON/JUNK/JNK(130)
      COMMON /DYN/ NTIME,DT,NPC,DAMP
      COMMON A(3000)
      MTOT=3000
C
C     READ AND PRINT OF GENERAL INFORMATION
C
  100 READ  (5,1000) NST,NDF,NTF,NLD,NAT,NFQ,NSD,BHED
      IF(NST.EQ.0) STOP
      CALL SECOND (T(1))
      I3=3
      IS=0
      IF(NSD.EQ.0) GO TO 50
      I3=1
      IS=NSD-1
   50 NSS=NST*I3
      IF(NFQ.GT.NSS) NFQ=NSS
      IF(NAT.EQ.0) NFQ=0
      WRITE  (6,2000) BHED,NST,NDF,NTF,NLD,NAT,NFQ,NSD
      REWIND 2
      REWIND 3
C
C     READ AND PRINT OF STORY INFORMATION
C
      N2=1+14*NST
      N3=N2+2*NST
      CALL TARI (A(1),A(N2),A(N3),NST)
C
C     READ AND PRINT OF FRAME PROPERTIES AND FORM LATERAL STIFFNESSES
C
      DO 200 I=1,NDF
      CALL SECOND (TT)
      READ  (5,1000) M,NC,NS,NCP,NBP,NFEF,NPAN,FHED
      WRITE (6,2001) FHED,M,NC,NS,NCP,NBP,NFEF,NPAN
C
      NB=NC-1
      NCP=NCP+1
      NBP=NBP+1
      NN=4*NC+NS+1
      N1=1
      N2=N1+14*NST
      N3=N2+NB
      N4=N3+5*NCP
      N5=N4+5*NBP
      N6=N5+7*NFEF
      N7=N6+NB*NS
      N8=N7+NS*NB*3
      N9=N8+NS*NC
      N10=N9+2*NPAN
      N11=N10+NN*NN
      N12=N11+3*NN
      N13=N12+NFEF
      N14=N13+5*NPAN
      IF(N14.GT.MTOT) CALL TABR (N14-MTOT)
      CALL TABF(A(N1),A(N2),A(N3),A(N4),A(N5),A(N6),A(N7),A(N8),A(N9),
     1 A(N10),A(N11),NST,NB,NC,NCP,NBP,NS,NFEF,NPAN,A(N12),A(N13),NN,I)
      CALL SECOND (TTT)
      TTT=TTT-TT
      WRITE (6,2003) I,TTT
  200 CONTINUE
      CALL SECOND (T(2))
C
C     SOLVE STATIC LOAD CASES
C
      N3=N2+NSS*NSS
      N4=N3+5*NSS
      N5=N4+((NST+1)*NST)/2
      N6=N5+3*NST
      N7=N6+NST*NTF
      N8=N7+5*NTF
      N9=N8+4*NTF
      IF(N9.GT.MTOT) CALL TABR (N9-MTOT)
      CALL TABL (A(N1),A(N2),A(N3),A(N4),A(N5),A(N6),A(N7),NSS,NST,NTF,
     1  A(N8))
      CALL SECOND (T(3))
C
C     MODE SHAPES AND FREQUENCIES AND SPECTRUM RESPONSE
C
      N2=N1+8*NST
      N3=N2+NSS*NSS
      N4=N3+NSS
      N5=N4+NSS
      N6=N5+NSS
      N7=N6+NSS*NSS
      N8=N2+(NFQ+5)*NSS
      IF(N8.GT.N7) N7=N8
      IF(N7.GT.MTOT) CALL TABR (N7-MTOT)
      CALL TABE (A(N1),A(N2),A(N3),A(N4),A(N5),A(N6),A(N6),NSS,NST)
C
C     COMPUTE DYNAMIC RESPONSE
C
      IF (NAT.NE.4) GO TO 250
      MLD=5+NTIME
      N3=N2+MLD*NSS
      N4=N3+2*NPC
      N5=N4+NTIME
      N6=N5+NSS
      IF (N6.GT.MTOT) CALL TABR (N6-MTOT)
      CALL TABDY(A(N2),A(N3), A(N4), A(N5),NSS)
  250 CALL SECOND (T(4))
C
C     COMPUTE FRAME DISPLACEMENTS
C
      IF(NAT.LE.2) NFQ=0
      IF (NAT.EQ.1) GO TO 300
      MLD=5+NFQ
      IF(NAT.EQ.4)MLD=5+NTIME
      N3=N2+MLD*NSS
      N4=N3+NST*NTF
      N5=N4+NST*MLD
      N6=N5+5*NTF
      N7=N6+NTF*4
      IF(N7.GT.MTOT) CALL TABR (N7-MTOT)
      CALL TABD (A(N1),A(N2),A(N3),A(N4),A(N5),NSS,NTF,MLD,NST,A(N6))
  300 CALL SECOND (T(5))
C
C     CALCULATE AND PRINT DISPLACEMENTS AND STRESSES
C
      IF (NAT.EQ.1) GO TO 400
      CALL TABP (MTOT)
  400 CALL SECOND (T(6))
      TT=T(6)-T(1)
      DO 500 I=1,5
  500 T(I)=T(I+1)-T(I)
      T(6)=TT
      WRITE (6,2002) T
C
      GO TO 100
C
 1000 FORMAT (7I5,9A5)
 2000 FORMAT (1H1,9A5/
     126H TOTAL NUMBER OF STORIES--I4/
     126H NUMBER OF DIFF. FRAMES---I4/
     126H TOTAL NUMBER OF FRAMES---I4/
     126H NUMBER OF LOAD CONDITIONSI4/
     126H TYPE OF ANALYSIS---------I4/
     126H NUMBER OF FREQUENCIES----I4/
     126H STORY TRANSLATION CODE---I4)
```

```
 2001 FORMAT (1H1,9A5/
     126H FRAME ID NUMBER---------- I4/
     126H NUMBER OF COLUMN LINES--- I4/
     126H NUMBER OF STORY LEVELS--- I4/
     126H NUMBER OF DIFF. COL. PROP I4/
     126H NUMBER OF DIFF. BEAM PROP I4/
     126H NUMBER OF DIFF. FEF------ I4/
     126H NUMBER OF PANEL ELEMENTS- I4)
 2002 FORMAT (///19H TIME LOG (SECONDS) //
     1  41H FORM FRAME STIFFNESSES................ = F7.2/
     2  41H SOLVE STATIC LOAD CASES............... = F7.2/
     3  41H MODE SHAPES AND FREQUENCIES........... = F7.2/
     4  41H COMPUTE FRAME DISPLACEMENTS........... = F7.2/
     5  41H COMPUTE AND PRINT STRESSES AND DISPLS. = F7.2//
     6  41H TOTAL TIME............................ = F7.2)
 2003 FORMAT (14H0...FRAME TYPE I3,4H ... /
     1  4X,33HTIME REQUIRED TO FORM STIFFNESS = F6.2)
C
      END
```

```
      SUBROUTINE TABR(M)
      WRITE (6,1000) M
      STOP
 1000 FORMAT (20H ** INCREASE MTOT BY I5,3H **)
      END
```

```
      SUBROUTINE TABI (SD,PA,PB,NST)
C
      DIMENSION SD(NST,14),PA(NST,2),PB(NST,2)
C
C     READ AND PRINT STORY DATA
C
      WRITE (6,3000)
      DO 200 N=1,NST
      LN=NST+1-N
      READ (5,1000) (SD(N,I),I=1,10),PA(N,1),PA(N,2),SD(N,12),SD(N,13),
     1                PB(N,1),PB(N,2)
  200 WRITE (6,2000) LN,(SD(N,I),I=1,8)
      WRITE (6,3001)
      DO 300 N=1,NST
      LN=NST+1-N
      SD(N,11)=SD(N,9)*(PA(N,2)-SD(N,6))-SD(N,10)*(PA(N,1)-SD(N,5))
      SD(N,14)=SD(N,12)*(PB(N,2)-SD(N,6))-SD(N,13)*(PB(N,1)-SD(N,5))
  300 WRITE (6,2001) LN,(SD(N,I),I=9,14),PA(N,1),PA(N,2),PB(N,1),PB(N,2)

      RETURN
C
 1000 FORMAT (A5,5X,7F10.0/8F10.0)
 2000 FORMAT (I8,3X,A5,7F13.2)
 2001 FORMAT (I8,6F13.2,3X,4F8.1)
 3000 FORMAT (////11H STORY DATA //  10H LEVEL NO. 3X,2HID 8X,6HHEIGHT
     1 6X,7HMASS(M) 8X,5HMR**2 9X,4HX(M) 9X,4HY(M) 10X,3HK-X 10X,3HK-Y)
 3001 FORMAT (///40H STRUCTURE LATERAL LOADS...CASES A AND B  //
     1 10H LEVEL NO. 7X,4HRX-A 9X,4HRY-A 10X,3HM-A 9X,4HRX-B 9X,4HRY-B
     2 10X,3HM-B 8X,2HXA 6X,2HYA 6X,2HXB 6X,2HYB )
      END
```

```
      SUBROUTINE TABF(SD,BW,CP,BP,FEF,LB,LDB,LC,LP,S,R,NST,NB,NC,NCP,
     1 NBP,NS,NFEF,NPAN,IFEF,PP,NN,IF)
      DIMENSION SD(NST,14),BW(NB),CP(5,NCP),BP(5,NBP),FEF(7,NFEF),
     1 LB(NS,NB),LDB(NS,NB,3),LC(NS,NC),LP(2,NPAN),IFEF(NFEF),PP(5,NPAN)
      COMMON /JUNK/ NLD,N,ND,MM,MN,LM(6),SS(6,6),P(6,3),T(6)
      DATA HI /1HI /
C
      NLD=3
C
C     READ AND PRINT OF BAY WIDTHS
C
      IF(NB.EQ.0) GO TO 100
      READ  (5,1000) (BW(I),I=1,NB)
      WRITE (6,2000) (BW(I),I=1,NB)
C
C     READ AND PRINT OF COLUMN PROPERTIES
C
  100 L=NCP-1
      READ  (5,1001) (M,(CP(J,I),J=1,5),I=1,L)
      WRITE (6,2001) (I,(CP(J,I),J=1,5),I=1,L)
      DO 110 I=1,5
  110 CP(I,NCP)=0.
C
C     READ AND PRINT OF BEAM PROPERTIES
C
      IF(NB.EQ.0) GO TO 300
      L=NBP-1
      READ  (5,1002) (M,(BP(J,I),J=1,5),I=1,L)
      WRITE (6,2002) (I,(BP(J,I),J=1,5),I=1,L)
      DO 120 I=1,5
  120 BP(I,NBP)=0.
C
C     READ AND PRINT OF FIXED END BEAM LOADS
C
      IF (NFEF.EQ.0) GO TO 208
  205 READ  (5,1003) (M,IFEF(I),(FEF(J,I),J=1,7),I=1,NFEF)
      WRITE (6,2003) (I,IFEF(I),(FEF(J,I),J=1,5),I=1,NFEF)
C
C     READ (OR GENERATE) AND PRINT OF BEAM LOCATION CARDS - LB
C
  208 IF (NB.EQ.0) GO TO 300
  210 WRITE (6,2004)
      DO 260 M=1,NB
      K=0
      DO 250 N=1,NS
      IF (K.NE.0) GO TO 220
      LN=NS+1-N
      READ (5,1004) LB(N,M),K,(LDB(N,M,L),L=1,NLD)
      WRITE(6,1004) LN,M,LB(N,M),K,(LDB(N,M,L),L=1,NLD)
      IF (LB(N,M).EQ.0) LB(N,M)=NBP
      GO TO 250
  220 K=K-1
      LB(N,M)=LB(N-1,M)
      DO 230 L=1,NLD
  230 LDB(N,M,L)=LDB(N-1,M,L)
  250 CONTINUE
  260 WRITE (6,3000)
      WRITE (6,3004)
      CALL TABCBL (LB,NS,NB,1,1,NBP)
      IF (NFEF.EQ.0) GO TO 300
      DO 270 L=1,NLD
      WRITE (6,4004) (HI,I=1,L)
      CALL TABCBL (LDB,NS,NB,3,L,100000)
  270 CONTINUE
C
C     READ (OR GENERATE) AND PRINT COLUMN LOCATIONS - LC
C
  300 WRITE (6,2005)
      DO 360 M=1,NC
      K=0
      DO 350 N=1,NS
      IF (K.NE.0) GO TO 320
      LN=NS+1-N
      READ  (5,1005) LC(N,M),K
      WRITE (6,1005) LN,M,LC(N,M),K
```

```
TABS 280          IF(LC(N,M).EQ.0) LC(N,M)=NCP
TABS 281          GO TO 350
TABS 282      320 K=K-1
TABS 283          LC(N,M)=LC(N-1,M)
TABS 284      350 CONTINUE
TABS 285      360 WRITE (6,3000)
TABS 286          WRITE (6,3005)
TABS 287          CALL TABCBL (LC,NS,NC,1,1,NCP)
TABS 288  C
TABS 289  C       READ AND PRINT OF PANEL CARDS - LP,PP
TABS 290  C
TABS 291          IF(NPAN.EQ.0) GO TO 380
TABS 292          READ  (5,1006) (LP(1,I),LP(2,I),(PP(J.I),J=1,5),I=1,NPAN)
TABS 293          WRITE (6,2006) (LP(1,I),LP(2,I),(PP(J,I),J=1,5),I=1,NPAN)
TABS 294  C
TABS 295  C       STORY BY STORY FORMATION AND REDUCTION OF STIFFNESS MATRIX
TABS 296  C
TABS 297      380 K=NST-NS
TABS 298          MM=2*NC
TABS 299          MN=4*NC
TABS 300          NN=MN+NS+1
TABS 301          CALL TABX(1,S,R,NN)
TABS 302  C
TABS 303          DO 700 N=1,NS
TABS 304  C
TABS 305          CALL TABX(2,S,R,NN)
TABS 306  C
TABS 307  C        1. FORM COLUMN MATRICES
TABS 308  C
TABS 309          DO 395 I=1,6
TABS 310          DO 390 L=1,NLD
TABS 311      390 P(I,L)=0.0
TABS 312          DO 395 J=1,6
TABS 313      395 SS(I,J)=0.0
TABS 314          ND=6
TABS 315          DO 500 M=1,NC
TABS 316          MC=LC(N,M)
TABS 317          IF(MC.EQ.NCP) GO TO 500
TABS 318          A=0.0
TABS 319          XL =SD(N+K,2)
TABS 320          IF (NB.EQ.0) GO TO 420
TABS 321          MR=LB(N,M)
TABS 322          IF (M.EQ.1) GO TO 400
TABS 323          ML=LB(N,M-1)
TABS 324          IF (M.EQ.NC) GO TO 410
TABS 325          A=(BP(5,ML)+BP(5,MR))/2.
TABS 326          GO TO 420
TABS 327      400 A=BP(5,MR)
TABS 328          GO TO 420
TABS 329      410 A=BP(5,ML)
TABS 330      420 XL=XL-A
TABS 331          BB=0.0
TABS 332          IF ( CP(4,MC) ) 430,430,425
TABS 333      425 BB=14.4*CP(3,MC)/(XL**2*CP(4,MC))
TABS 334      430 COMM=2.*CP(1,MC)*CP(3,MC)/(XL*(1.+2.*BB))
TABS 335          SA=COMM*(2.+BB)
TABS 336          SB=COMM*(1.-BB)
TABS 337          SC=CP(2,MC)*CP(1,MC)/XL
TABS 338          CALL TABY(SA,SB,SC,XL,A,0.0)
TABS 339          LM(3)=2*M
TABS 340          LM(1)=LM(3)+MM
TABS 341          LM(5)=LM(1)-1
TABS 342          LM(6)=LM(3)-1
TABS 343          LM(4)=MN+N
TABS 344          LM(2)=LM(4)+1
TABS 345          CALL TABX(5,S,R,NN)
TABS 346      500 CONTINUE
TABS 347  C
TABS 348  C        2. FORM BEAM MATRICES
TABS 349  C
TABS 350          IF (NB.EQ.0) GO TO 610
TABS 351          ND=4
TABS 352          DO 600 M=1,NB
TABS 353          MB=LB(N,M)
TABS 354          IF(MB.EQ.NBP) GO TO 600
TABS 355          ML=LC(N,M)
TABS 356          MR=LC(N,M+1)
TABS 357          A=CP(5,MR)/2.
TABS 358          B=CP(5,ML)/2.
TABS 359          XL=BW(M)-A-B
TABS 360          EIDL=BP(1,MB)*BP(2,MB)/XL
TABS 361          SA=BP(3,MB)*EIDL
TABS 362          SB=BP(4,MB)*SA
TABS 363          CALL TABY(SA,SB,0.0,XL,A,B)
TABS 364          LM(1)=2*M
TABS 365          LM(2)=LM(1)-1
TABS 366          LM(3)=LM(1)+2
TABS 367          LM(4)=LM(3)-1
TABS 368          DO 550 L=1,NLD
TABS 369          DO 520 I=1,4
TABS 370      520 P(I,L)=0.
TABS 371          J=LDB(N,M,L)
TABS 372          IF (J) 550,550,530
TABS 373      530 V=FEF(5,J)*XL/2.
TABS 374          YM=V*XL/6.
TABS 375          P(1,L)=FEF(1,J)+YM
TABS 376          P(2,L)=FEF(2,J)+V
TABS 377          P(3,L)=-FEF(3,J)-YM
TABS 378          P(4,L)=FEF(4,J)+V
TABS 379          IF(IFEF(J)) 550,540,550
TABS 380      540 P(1,L)=P(1,L)+P(2,L)*B
TABS 381          P(3,L)=P(3,L)-P(4,L)*A
TABS 382      550 CONTINUE
TABS 383          CALL TABX(5,S,R,NN)
TABS 384      600 CONTINUE
TABS 385  C
TABS 386  C       FORM PANEL STIFFNESS
TABS 387  C
TABS 388          IF(NPAN.EQ.0) GO TO 610
TABS 389          DO 720 I=1,6
TABS 390          DO 720 J=1,3
TABS 391      720 P(I,J)=0.
TABS 392          ND=6
TABS 393          DO 800 L=1,NPAN
TABS 394          NP=NS-LP(1,L)+1
TABS 395          IF(NP.NE.N) GO TO 800
TABS 396          M=LP(2,L)
TABS 397          XL=SD(N+K,2)
TABS 398          D=BW(M)
TABS 399          BB=XL**2*PP(4,L)*PP(5,L)
TABS 400          IF (BB) 730,730,725
TABS 401      725 BB=6.0*PP(1,L)*PP(3,L)/BB
TABS 402      730 COMM=2.0*PP(1,L)*PP(3,L)/(XL*(1.+2.*BB))
TABS 403          SA=COMM*(2.+BB)
TABS 404          SB=COMM*(1.-BB)
TABS 405          SC=PP(1,L)*PP(2,L)/XL
TABS 406          CALL TABPN (1,SA,SB,SC,XL,D,SS,CA,T)
TABS 407          LM(2)=MN+N
TABS 408          LM(1)=LM(2)+1
TABS 409          LM(5)=2*M-1
TABS 410          LM(6)=LM(5)+2
TABS 411          LM(3)=LM(5)+MM
TABS 412          LM(4)=LM(6)+MM
TABS 413          CALL TABX (5,S,R,NN)
TABS 414      800 CONTINUE
TABS 415  C
TABS 416  C        REDUCE STIFFNESS MATRIX FOR LEVEL N
TABS 417  C
TABS 418      610 CONTINUE
TABS 419          CALL TABX(3,S,R,NN)
TABS 420  C
TABS 421      700 CONTINUE
TABS 422  C
TABS 423  C       WRITE LATERAL STIFFNESS ON TAPE
TABS 424  C
TABS 425      810 N=NST+1-NS
TABS 426          CALL TABX(4,S,R,NN)
TABS 427          WRITE (3) BW,CP,BP,FEF,LB,LDB,LC,LP,IFEF,PP
TABS 428          WRITE (3) IF,NC,NS,NCP,NBP,NFEF,NPAN
TABS 429  C
```

```
TABS 430          RETURN
TABS 431     1000 FORMAT (8F10.0)
TABS 432     2000 FORMAT (11H0BAY WIDTHS/(8F15.3))
TABS 433     1001 FORMAT (I5,F15.0,4F10.0)
TABS 434     2001 FORMAT (10H0COLUMN ID  11X,1HE 11X,1HA 11X,1HI 10X,2HSA 11X,1HW/
TABS 435         1 (I10,5F12.2))
TABS 436     1002 FORMAT (I5,F15.0,4F10.0)
TABS 437     2002 FORMAT (10H0  BEAM ID 11X,1HE 11X,1HI 11X,1HK 11X,1HC 11X,1HD/
TABS 438         1 (I10,5F12.2))
TABS 439     1003 FORMAT (2I5,7F10.0)
TABS 440     2003 FORMAT (10H0   FEF ID 6X,4HCODE 10X,2HML 10X,2HVL 10X,2HMR 10X,
TABS 441         1 2HVR,11X,1HW  /(2I10,5F12.3))
TABS 442     1004 FORMAT (9I5)
TABS 443     2004 FORMAT (15H0BEAM LOCATIONS/35H0 LEVEL  M  BID  GEN  VL1  VL2  VL3)
TABS 444     3004 FORMAT (//25H GENERATED BEAM LOCATIONS )
TABS 445     4004 FORMAT (//34H GENERATED BEAM LOADS...LOAD CASE  3A1)
TABS 446     1005 FORMAT (4I5)
TABS 447     2005 FORMAT (17H0COLUMN LOCATIONS/ 20H0 LEVEL  M  CID  GEN )
TABS 448     3005 FORMAT (//27H GENERATED COLUMN LOCATIONS )
TABS 449     1006 FORMAT (2I5,5F10.0)
TABS 450     2006 FORMAT (///12H PANEL CARDS //11H LEVEL    M 16X,1HE 14X,1HA 14X,
TABS 451         1  1HI 13X,2HSA 14X,1HG /(I4,I7,2X,5F15.2))
TABS 452     3000 FORMAT (1H )
TABS 453          END
```

```
TABS 454          SUBROUTINE TABX(IO,S,R,NN)
TABS 455          DIMENSION S(NN,NN),R(NN,1)
TABS 456          COMMON /JUNK/ NLD,N,ND,MM,MN,LM(6),SS(6,6),P(6,3)
TABS 457   C
TABS 458          GO TC (1,2,3,4,5),IO
TABS 459   C
TABS 460   C      IO=1 ZERO MATRICES
TABS 461   C
TABS 462        1 DO 200 I=1,NN
TABS 463          DO 190 L=1,NLD
TABS 464      190 R(I,L)=0.0
TABS 465          DO 200 J=1,NN
TABS 466      200 S(I,J)=0.0
TABS 467          GO TO 800
TABS 468   C
TABS 469   C      IO=2 SHIFT STORAGE
TABS 470   C
TABS 471        2 DO 220 I=1,MM
TABS 472          II=MM+I
TABS 473          DO 210 J=1,MM
TABS 474          JJ=MM+J
TABS 475          S(I,J)=S(II,JJ)
TABS 476          S(II,JJ)=0.0
TABS 477      210 S(I,JJ)=0.0
TABS 478          DO 215 L=1,NLD
TABS 479          R(I,L)=R(II,L)
TABS 480      215 R(II,L)=0.0
TABS 481          JL=MN+1
TABS 482          DO 220 J=JL,NN
TABS 483          S(I,J)=S(II,J)
TABS 484      220 S(II,J)=0.0
TABS 485          GO TO 800
TABS 486   C
TABS 487   C      IO=3 REDUCE MATRIX AND WRITE B.S. EQUATIONS ON TAPE 3
TABS 488   C
TABS 489        3 NNN=MN+N+1
TABS 490          DO 345 I=1,MM
TABS 491          IF (S(I,I)) 345,345,305
TABS 492   C
TABS 493      305 DO 320 L=1,NLD
TABS 494      320 R(I,L)=R(I,L)/S(I,I)
TABS 495   C
TABS 496          JJ=I+1
TABS 497          DO 310 J=JJ,NNN
TABS 498          S(J,I)=S(I,J)
TABS 499      310 S(I,J)=S(I,J)/S(I,I)
TABS 500   C
TABS 501          DO 340 K=JJ,NNN
TABS 502          DO 330 J=K,NNN
TABS 503      330 S(K,J)=S(K,J)-S(K,I)*S(I,J)
TABS 504          DO 340 L=1,NLD
TABS 505      340 R(K,L)=R(K,L)-S(K,I)*R(I,L)
TABS 506      345 CONTINUE
TABS 507   C
TABS 508          WRITE (3) (((S(I,J),J=1,NN),(R(I,L),L=1,NLD)),I=1,MM)
TABS 509          GO TO 800
TABS 510   C
TABS 511   C      IO=4 WRITE LATERAL STIFFNESS MATRIX ON TAPE 2
TABS 512   C
TABS 513        4 IL=MN+1
TABS 514          IH=NN-1
TABS 515          NS=NN-MN-1
TABS 516          LRD=((NS+1)*NS)/2
TABS 517          WRITE (2) LRD,N ,((S(I,J),J=I,IH),I=IL,IH),((R(I,L),I=IL,IH),
TABS 518         1          L=1,NLD)
TABS 519          GO TO 800
TABS 520   C
TABS 521   C      IO=5 ADD ELEMENT STIFFNESS TO TOTAL STIFFNESS
TABS 522   C
TABS 523        5 DO 550 I=1,ND
TABS 524          II=LM(I)
TABS 525          DO 510 L=1,NLD
TABS 526      510 R(II,L)=R(II,L)+P(I,L)
TABS 527          DO 550 J=1,ND
TABS 528          JJ=LM(J)
TABS 529      550 S(II,JJ)=S(II,JJ)+SS(I,J)
TABS 530          GO TO 800
TABS 531   C
TABS 532      800 RETURN
TABS 533   C
TABS 534          END
```

```
TABS 535          SUBROUTINE TABY(SA,SB,SC,XL,A,B)
TABS 536          COMMON /JUNK/ NLD,N,ND,MM,MN,LM(6),SS(6,6),P(6,3),T(2,4)
TABS 537   C
TABS 538   C      FORM BEAM OR COLUMN STIFFNESS
TABS 539   C
TABS 540          T(2,1)=B/XL
TABS 541          T(1,1)=1.0+T(2,1)
TABS 542          T(1,2)=1.0/XL
TABS 543          T(2,2)=T(1,2)
TABS 544          T(1,3)=A/XL
TABS 545          T(2,3)=1.0+T(1,3)
TABS 546          T(1,4)=-T(1,2)
TABS 547          T(2,4)=T(1,4)
TABS 548   C
TABS 549          DO 100 I=1,4
TABS 550          D1=SA*T(1,I)+SB*T(2,I)
TABS 551          D2=SB*T(1,I)+SA*T(2,I)
TABS 552          DO 100 J=1,4
TABS 553      100 SS(J,I)=D1*T(1,J)+D2*T(2,J)
TABS 554   C
TABS 555          IF(SC) 120,120,110
TABS 556      110 SS(5,5)=SC
TABS 557          SS(5,6)=-SC
TABS 558          SS(6,5)=-SC
TABS 559          SS(6,6)=SC
TABS 560   C
TABS 561      120 RETURN
TABS 562   C
TABS 563          END
```

```
      SUBROUTINE TABPN (IO,SA,SB,SC,XL,D,SS,CA,T)
C
      DIMENSION SS(6,6),CA(4,6),T(3,6)
C
C     PANEL STIFFNESS AND FORCE MATRICES
C
      DO 10 I=1,3
      DO 10 J=1,6
   10 T(I,J)=0.0
C
      T(1,1)=1.0/XL
      T(1,2)=T(1,1)
      T(1,2)=-T(1,1)
      T(2,2)=-T(1,1)
C
      T(1,4)=1.0/D
      T(2,6)= T(1,4)
      T(1,3)=-T(1,4)
      T(2,5)=-T(1,4)
C
      T(3,3)= 0.5
      T(3,4)= 0.5
      T(3,5)=-0.5
      T(3,6)=-0.5
C
      GO TO (100,200),IO
C
C      STIFFNESS SS (IO=1)
  100 DO 120 J=1,6
      U=SA*T(1,J)+SB*T(2,J)
      V=SB*T(1,J)+SA*T(2,J)
      W=SC*T(3,J)
      DO 120 I=1,6
  120 SS(I,J)=U*T(1,I)+V*T(2,I)+W*T(3,I)
      RETURN
C
C      FORCE MATRIX CA  (IO=2)
  200 DO 220 I=1,6
      CA(1,I)=SA*T(1,I)+SB*T(2,I)
      CA(2,I)=SB*T(1,I)+SA*T(2,I)
      CA(3,I)=SC*T(3,I)
  220 CA(4,I)=-(CA(1,I)+CA(2,I))/XL
      RETURN
C
      END
```

```
      SUBROUTINE TABCBL (LBC,NS,NR,NL,L,NPROP)
      COMMON /JUNK/ NLD,LOC(40)
      DIMENSION LBC(NS,NR,NL)
C
C     PRINT MEMBER LOCATIONS AS GENERATED
C
      DO 200 J=1,NR,40
      JJ=J+39
      IF (JJ.GT.NR) JJ=NR
      WRITE (6,2000) (I,I=J,JJ)
      WRITE (6,2002)
      DO 200 I=1,NS
      DO 100 K=J,JJ
      LOC(K)=LBC(I,K,L)
      IF (LOC(K).EQ.NPROP) LOC(K)=0
  100 CONTINUE
  200 WRITE (6,2001) I,(LOC(K),K=J,JJ)
C
      RETURN
 2000 FORMAT (6HOSTORY 40I4)
 2001 FORMAT (I4,2X,40I4)
 2002 FORMAT (1H )
      END
```

```
      SUBROUTINE TABL (A,SS,RR,S,R,D,AA,MSS,MST,MTF,HED)
      DIMENSION SS(MSS,MSS),RR(MSS,5),A(MST,14),S(1),R(MST,3)
     1          ,D(MST,MTF),AA(MTF,5),HED(MTF,4)
      COMMON/GEN/ NST,NDF,NTF,NLD,NAT,NFQ,NSD,BHED(9),FHED(9),NSS,I3,IS
     1            ,RLAB(3)
      COMMON/JUNK/AI(3),AJ(3)
C
C     COMPUTE STRUCTURE LATERAL STIFFNESS , SOLVE STATIC LOAD CASES
C
      REWIND 2
      DO 50 I=1,NSS
      DO 40 J=1,3
   40 RR(I,J)=0.
      DO 50 J=1,NSS
   50 SS(I,J)=0.
      DO 100 I=1,NST
      II=I3*(I-1)
      SS(II+1,II+1)=A(I,7+IS)
      IF(NSD.EQ.0) SS(II+2,II+2)=A(I,8)
      DO 100 J=1,I3
      DO 100 L=1,2
      LL=5+3*L+J+IS
  100 RR(II+J,L+3)=A(I,LL)
C
      WRITE (6,3000)
      IFP=0
      DO 500 K=1,NTF
      READ  (5,1000) IF,IFC,X1,Y1,X2,Y2,(HED(K,J),J=1,4)
      WRITE (6,2000) K,IF,IFC,X1,Y1,X2,Y2,(HED(K,J),J=1,4)
      IF(IF.EQ.IFP) GO TO 150
      READ (2) LRD,NT,(S(I),I=1,LRD),((R(I,L),I=NT,NST),L=1,3)
      IFP=IF
  150 YY=Y1-Y2
      XL=SQRT((X2-X1)*(X2-X1)+YY*YY)
      DO 200 N=NT,NST
      AR=X1*(Y2-A(N,6))+X2*(A(N,6)-Y1)+A(N,5)*YY
  200 D(N,K)=AR/XL
C
      AI(1)=(X2-X1)/XL
      AI(2)=(Y2-Y1)/XL
      AJ(2)=AI(2)
      AJ(1)=AI(1)
C
      KK=0
      DO 400 N=NT,NST
      AI(3)=-D(N,K)
      NN=I3*(N-1)
      DO 300 L=1,3
      DO 300 I=1,I3
  300 RR(NN+I,L)=RR(NN+I,L)+R(N,L)*AI(I+IS)
      DO 400 M=N,NST
      MM=I3*(M-1)
      AJ(3)=-D(M,K)
      KK=KK+1
      DO 400 I=1,I3
      DO 400 J=1,I3
  400 SS(NN+I,MM+J)=SS(NN+I,MM+J)+S(KK)*AI(I+IS)*AJ(J+IS)
C
      AA(K,1)=IF
      AA(K,2)=IFC
      AA(K,3)=AI(1)
      AA(K,4)=AI(2)
      AA(K,5)=NT
  500 CONTINUE
C
      DO 600 I=1,NSS
      DO 600 J=I,NSS
  600 SS(J,I)=SS(I,J)
      REWIND 2
      WRITE (2) SS
      IF(NAT.EQ.1) RETURN
      CALL TABQ (SS,NSS,RR,5)
C
C     PRINT STRUCTURE DISPLACEMENTS
C
```

```
TABS 707          WRITE (6,2001)
TABS 708          DO 700 I=1,NST
TABS 709          LN=NST+1-I
TABS 710          WRITE (6,2003)
TABS 711          DO 700 J=1,I3
TABS 712          II=I3*(I-1)+J
TABS 713      700 WRITE (6,2002) LN,A(I,1),RLAB(J+IS),(RR(II,L),L=1,5)
TABS 714  C
TABS 715          WRITE (2) RR
TABS 716          WRITE (2) AA,D,HED
TABS 717  C
TABS 718          RETURN
TABS 719     1000 FORMAT (2I5,4F10.0,6A5)
TABS 720     2000 FORMAT (I4,I6,I9,6X,  4F12.3,10X,6A5)
TABS 721     2001 FORMAT (   24H1STRUCTURE DISPLACEMENTS ,30X,10HLOAD CASES  //
TABS 722         1  18H LEVEL   ID   DIRN 10X,1HI 11X,2HII 10X,3HIII 12X,1HA 12X,
TABS 723         1  1HB )
TABS 724     2002 FORMAT (I4,3X,A5,2X,A4,3X,5F13.6)
TABS 725     2003 FORMAT (1H )
TABS 726     3000 FORMAT (      20H1FRAME POSITION DATA //
TABS 727         1  23H FRAME   ID  FORCE CODE 10X,2HX1 10X,2HY1 10X,2HX2 10X,2HY2 )
TABS 728          END
```

```
TABS 729          SUBROUTINE TABQ (A,N,B,NL)
TABS 730  C
TABS 731  C       SOLUTION OF SYMMETRICAL LINEAR EQUATIONS- E L WILSON
TABS 732  C
TABS 733          DIMENSION A(N,N),B(N,NL)
TABS 734  C
TABS 735          M=0
TABS 736  C
TABS 737  C       REDUCTION OF M TH EQUATION
TABS 738  C
TABS 739       50 M=M+1
TABS 740          MM=M+1
TABS 741          DO 60 L=1,NL
TABS 742       60 B(M,L)=B(M,L)/A(M,M)
TABS 743          IF (M-N) 70,130,70
TABS 744       70 DO 80 J=MM,N
TABS 745       80 A(M,J)=A(M,J)/A(M,M)
TABS 746  C
TABS 747  C       SUBSTITUTION INTO REMAINING EQUATIONS
TABS 748  C
TABS 749          DO 120 I=MM,N
TABS 750          IF (A(I,M)) 90,120,90
TABS 751       90 DO 100 J=I,N
TABS 752          A(I,J)=A(I,J)-A(I,M)*A(M,J)
TABS 753      100 A(J,I)=A(I,J)
TABS 754          DO 110 L=1,NL
TABS 755      110 B(I,L)=B(I,L)-A(I,M)*B(M,L)
TABS 756      120 CONTINUE
TABS 757          GO TO 50
TABS 758  C
TABS 759  C       BACK SUBSTITUTION
TABS 760  C
TABS 761      130 M=M-1
TABS 762          IF (M.EQ.0) GO TO 150
TABS 763          MM=M+1
TABS 764          DO 140 L=1,NL
TABS 765          DO 140 J=MM,N
TABS 766      140 B(M,L)=B(M,L)-A(M,J)*B(J,L)
TABS 767          GO TO 130
TABS 768  C
TABS 769      150 RETURN
TABS 770          END
```

```
TABS 771          SUBROUTINE TABE (A,F,XM,W,IQ,S,PA,MSS,MST)
TABS 772          DIMENSION F(MSS,MSS),S(MSS,MSS),XM(1),W(1),IQ(1),A(MST,4),PA(2,1)
TABS 773          COMMON/GEN/ NST,NDF,NTF,NLD,NAT,NFQ,NSD,BHED(9),FHED(9),NSS,I3,IS
TABS 774         1                ,RLAB(3)
TABS 775          COMMON /JUNK/ SC(2),SHED(10)
TABS 776          COMMON /DYN/ NTIME,DT,NPC,DAMP
TABS 777  C
TABS 778  C       COMPUTE MODE SHAPES AND FREQUENCIES
TABS 779  C
TABS 780          REWIND 2
TABS 781          TPI=8.0*ATAN(1.0)
TABS 782          READ (2) S
TABS 783          IF (NAT.EQ.0) GO TO 700
TABS 784          DO 100 I=1,NST
TABS 785          II=I3*(I-1)+1
TABS 786          XM(II  )=A(I,3)
TABS 787          XM(II+1)=A(I,3)
TABS 788      100 XM(II+2)=A(I,4)
TABS 789  C
TABS 790          DO 150 I=1,NSS
TABS 791          IF(XM(I).GT.0.) GO TO 150
TABS 792          WRITE (6,3002)
TABS 793          STOP
TABS 794      150 XM(I)=1.0/SQRT(XM(I))
TABS 795          DO 200 I=1,NSS
TABS 796          DO 200 J=1,NSS
TABS 797      200 S(I,J)=S(I,J)*XM(I)*XM(J)
TABS 798  C
TABS 799          CALL TABH (S,NSS,0,F,NR,W,IQ)
TABS 800  C
TABS 801          DO 250 I=1,NSS
TABS 802          W(I)=S(I,I)
TABS 803          DO 250 J=1,NSS
TABS 804      250 F(I,J)=F(I,J)*XM(I)
TABS 805          DO 300 I=1,NFQ
TABS 806          WM=W(I)
TABS 807          DO 270 J=I,NSS
TABS 808          IF(W(J).GT.WM) GO TO 270
TABS 809          WM=W(J)
TABS 810          K=J
TABS 811      270 CONTINUE
TABS 812  C
TABS 813          W(K)=W(I)
TABS 814          W(I)=TPI/SQRT(WM)
TABS 815          DO 300 J=1,NSS
TABS 816          WM=F(J,K)
TABS 817          F(J,K)=F(J,I)
TABS 818      300 F(J,I)=WM
TABS 819  C       PRINT MODES,PERIODS
TABS 820      520 WRITE (6,2001) (I,W(I),I=1,NFQ)
TABS 821          DO 600 I=1,NFQ,8
TABS 822          IH=I+7
TABS 823          IF(IH.GT.NFQ) IH=NFQ
TABS 824          WRITE (6,2003) (J,J=I,IH)
TABS 825          DO 600 N=1,NST
TABS 826          LN=NST+1-N
TABS 827          NN=I3*(N-1)
TABS 828          WRITE (6,2002)
TABS 829          DO 600 J=1,I3
TABS 830      600 WRITE (6,2004) LN,A(N,1),RLAB(J+IS),( F(NN+J,K),K=I,IH)
TABS 831          IF(NAT.EQ.1) RETURN
TABS 832  C
TABS 833  C       DYNAMIC ANALYSIS
TABS 834  C
TABS 835          IF(NAT.NE.4) GO TO 440
TABS 836  C
TABS 837  C       GROUND MOTION CONTROL DATA
TABS 838          READ (5,1001) NPC,NTIME,SF,FI,DT,SHED
TABS 839          WRITE(6,2005)SHED,NPC,NTIME,SF,FI,DT
TABS 840          GO TO 445
TABS 841  C
TABS 842      440 IF(NAT.NE.3) GO TO 700
TABS 843  C
TABS 844  C       RESPONSE SPECTRUM DATA
TABS 845          READ  (5,1000) NPC,SF,FI,SHED,(PA(1,I),PA(2,I),I=1,NPC)
```

```
TABS 846          WRITE (6,2000) SHED,NPC,SF,FI,(PA(1,I),PA(2,I),I=1,NPC)
TABS 847  C
TABS 848  C       MODAL PARTICIPATION FACTORS
TABS 849  C
TABS 850    445 FI=FI*ATAN(1.0)/45.
TABS 851          SC(1)=SIN(FI)
TABS 852          SC(2)=COS(FI)
TABS 853          DO 500 I=1,NFQ
TABS 854          RLM=0.
TABS 855          DO 450 J=1,NST
TABS 856          JJ=I3*(J-1)+1
TABS 857          FR=F(JJ,I)*SC(1+IS)
TABS 858          IF(NSD.EQ.0) FR=FR+F(JJ+1,I)*SC(2)
TABS 859    450 RLM=RLM+FR*A(J,3)
TABS 860          WW=(TPI/W(I))**2
TABS 861          IF (NAT.EQ.3) YM=RLM*TABA(NPC,SF,W(I),PA)/WW
TABS 862          IF (NAT.EQ.4) YM=RLM*SF
TABS 863          DO 500 J=1,NSS
TABS 864    500 F(J,I)=F(J,I)*YM
TABS 865  C
TABS 866  C       SAVE MODE SHAPES ON TAPE 1   NAT=4
TABS 867  C
TABS 868          IF(NAT.NE.4) GO TO 550
TABS 869          REWIND 1
TABS 870          WRITE(6,3000)
TABS 871          DO 800 K=1,NFQ
TABS 872          READ (5,1002) I,DAMP
TABS 873          IF(DAMP.LE.1.0) GO TO 720
TABS 874          DAMP=1.0
TABS 875          WRITE (6,3001) I
TABS 876    720 WRITE (6,2006) I,DAMP
TABS 877          WRITE (1) W(K),DAMP,(F(I,K),I=1,NSS)
TABS 878    800 CONTINUE
TABS 879  C
TABS 880    550 DO 650 K=1,NFQ
TABS 881          I=NFQ+1-K
TABS 882          DO 650 J=1,NSS
TABS 883    650 F(J,I+5)=F(J,I)
TABS 884  C
TABS 885    700 READ (2) ((F(I,J),I=1,NSS),J=1,5)
TABS 886  C
TABS 887          RETURN
TABS 888  C
TABS 889   1000 FORMAT (I5,F15.0,F10.0,10A5/(2F10.0))
TABS 890   1001 FORMAT (2I5,3F10.0,10A4)
TABS 891   1002 FORMAT (I5,F10.2)
TABS 892   2000 FORMAT (     22H1ACCELERATION SPECTRUM ,5X,10A5//
TABS 893        1 25H NUMBER OF PERIOD CARDS = I8/
TABS 894        2 25H SCALE FACTOR           = F10.3/
TABS 895        3 25H ANGLE OF EQ INCIDENCE  = F10.3//
TABS 896        4 26H  PERIOD      ACCELERATION //(F10.3,5X,F10.3))
TABS 897   2001 FORMAT (     22H1MODE NUMBER     PERIOD  //(I7,6X,F11.6))
TABS 898   2002 FORMAT (1H )
TABS 899   2003 FORMAT (/// 12H MODE SHAPES/ /18H LEVEL  ID     DIRN ,8I13)
TABS 900   2004 FORMAT (I5,2X,A5,2X,A4,2X,8F13.6)
TABS 901   2005 FORMAT (23H1RESPONSE ANALYSIS DATA  ///
TABS 902        . 31H ACCELERATION HISTORY HEADING..  10A4//
TABS 903        1 30H NUMBER OF ACCELERATION CARDS  I3 /
TABS 904        2 30H NUMBER OF OUTPUT TIMES        I3 /
TABS 905        3 30H ACCELERATION SCALE FACTOR     F10.4/
TABS 906        4 30H ANGLE OF EQ INCIDENCE         F10.4/
TABS 907        5 30H TIME INCREMENT FOR OUTPUT     F10.4/)
TABS 908   2006 FORMAT(I4,F12.3)
TABS 909   3000 FORMAT( /// 16H MODE     DAMPING )
TABS 910   3001 FORMAT (30H DAMPING MUST BE LESS THAN 1.0 /
TABS 911        1  15H VALUE FOR MODE  I3, 6H RESET )
TABS 912   3002 FORMAT (/// 22H NEGATIVE OR ZERO MASS //21H EXECUTION TERMINATED)
TABS 913          END
```

```
TABS 914          FUNCTION   TABA (NPC,SF,T,PA)
TABS 915          DIMENSION PA(2,NPC)
TABS 916  C
TABS 917  C       SPECTRUM INTERPOLATION
TABS 918  C
TABS 919          DO 100 I=2,NPC
TABS 920          T1=PA(1,I-1)
TABS 921          T2=PA(1,I  )
TABS 922          IF(T.LE.T2) GO TO 200
TABS 923    100 CONTINUE
TABS 924    200 R1=(T2-T)/(T2-T1)
TABS 925          R2=(T-T1)/(T2-T1)
TABS 926          TABA=SF*(PA(2,I-1)*R1+PA(2,I)*R2)
TABS 927          RETURN
TABS 928          END
```

```
TABS 929          SUBROUTINE TABH (H,N,IEGEN,U,NR,X,IQ)
TABS 930  C
TABS 931          DIMENSION H(N,N),U(N,N),X(N),IQ(N)
TABS 932  C
TABS 933          IF (IEGEN) 15,10,15
TABS 934   10     DO 14 I=1,N
TABS 935          DO 14 J=1,N
TABS 936          IF(I-J) 12,11,12
TABS 937   11     U(I,J)=1.0
TABS 938          GO TO 14
TABS 939   12     U(I,J)=0.
TABS 940   14     CONTINUE
TABS 941  C
TABS 942   15     NR = 0
TABS 943          IF (N-1) 1000,1000,17
TABS 944  C
TABS 945  C       SCAN FOR LARGEST OFF DIAGONAL ELEMENT IN EACH ROW
TABS 946  C       X(I) CONTAINS LARGEST ELEMENT IN ITH ROW
TABS 947  C       IQ(I) HOLDS SECOND SUBSCRIPT DEFINING POSITION OF ELEMENT
TABS 948  C
TABS 949   17     NMI1=N-1
TABS 950          DO 30 I=1,NMI1
TABS 951          X(I) = 0.
TABS 952          IPL1=I+1
TABS 953          DO 30 J=IPL1,N
TABS 954          IF ( X(I) - ABS( H(I,J))) 20,20,30
TABS 955   20     X(I)=ABS(H(I,J))
TABS 956          IQ(I)=J
TABS 957   30     CONTINUE
TABS 958  C
TABS 959  C       SET INDICATOR FOR SHUT-OFF.RAP=2**-27,NR=NO. OF ROTATIONS
TABS 960          RAP=7.450580596E-9
TABS 961          HDTEST=1.0E38
TABS 962  C
TABS 963  C       FIND MAXIMUM OF X(I) S FOR PIVOT ELEMENT AND
TABS 964  C       TEST FOR END OF PROBLEM
TABS 965  C
TABS 966   40     DO  70  I=1,NMI1
TABS 967          IF (I-1) 60,60,45
TABS 968   45     IF ( XMAX- X(I)) 60,70,70
TABS 969   60     XMAX=X(I)
TABS 970          IPIV=I
TABS 971          JPIV=IQ(I)
TABS 972   70     CONTINUE
TABS 973  C
TABS 974  C       IS MAX. X(I) EQUAL TO ZERO, IF LESS THAN HDTEST, REVISE HDTEST
TABS 975          IF ( XMAX) 1000,1000,80
TABS 976   80     IF (HDTEST) 90,90,85
TABS 977   85     IF (XMAX - HDTEST) 90,90,148
TABS 978   90     HDIMIN = ABS( H(1,1) )
TABS 979          DO 110  I= 2,N
TABS 980          IF (HDIMIN- ABS( H(I,I))) 110,110,100
TABS 981  100     HDIMIN=ABS(H(I,I))
```

```
TABS 982   110  CONTINUE
TABS 983  C
TABS 984        HDTEST=HDIMIN*RAP
TABS 985  C
TABS 986  C     RETURN IF MAX.H(I,J)LESS THAN(2**-27)ABSF(H(K,K)-MIN)
TABS 987        IF (HDTEST- XMAX) 148,1000,1000
TABS 988   148  NR = NR+1
TABS 989  C
TABS 990  C     COMPUTE TANGENT, SINE AND COSINE,H(I,I),H(J,J)
TABS 991   150  TANG=SIGN(2.0,(H(IPIV,IPIV)-H(JPIV,JPIV)))*H(IPIV,JPIV)/(ABS(H(I
TABS 992       1PIV,IPIV)-H(JPIV,JPIV))+SQRT((H(IPIV,IPIV)-H(JPIV,JPIV))**2+4.0*H
TABS 993       2(IPIV,JPIV)**2))
TABS 994        COSINE=1.0/SQRT(1.0+TANG**2)
TABS 995        SINE=TANG*COSINE
TABS 996        HII=H(IPIV,IPIV)
TABS 997        H(IPIV,IPIV)=COSINE**2*(HII+TANG*(2.*H(IPIV,JPIV)+TANG*H(JPIV,JPIV
TABS 998       1)))
TABS 999        H(JPIV,JPIV)=COSINE**2*(H(JPIV,JPIV)-TANG*(2.*H(IPIV,JPIV)-TANG*H
TABS1000       1II))
TABS1001        H(IPIV,JPIV)=0.
TABS1002  C
TABS1003  C      PSEUDO RANK THE EIGENVALUES
TABS1004  C      ADJUST SINE AND COS FOR COMPUTATION OF H(IK) AND U(IK)
TABS1005        IF ( H(IPIV,IPIV) -  H(JPIV,JPIV)) 152,153,153
TABS1006   152  HTEMP = H(IPIV,IPIV)
TABS1007        H(IPIV,IPIV) = H(JPIV,JPIV)
TABS1008        H(JPIV,JPIV) = HTEMP
TABS1009  C       RECOMPUTE SINE AND COS
TABS1010        HTEMP = SIGN (1.0, -SINE) * COSINE
TABS1011        COSINE = ABS (SINE)
TABS1012        SINE = HTEMP
TABS1013   153  CONTINUE
TABS1014  C
TABS1015  C     INSPECT THE IQS BETWEEN I+1 AND N-1 TO DETERMINE
TABS1016  C     WHETHER A NEW MAXIMUM VALUE SHOULD BE COMPUTED SINCE
TABS1017  C     THE PRESENT MAXIMUM IS IN THE I OR J ROW.
TABS1018  C
TABS1019        DO 350 I=1,NMI1
TABS1020        IF(I-IPIV)210,350,200
TABS1021   200  IF(I-JPIV)210,350,210
TABS1022   210  IF(IQ(I)-IPIV)230,240,230
TABS1023   230  IF(IQ(I)-JPIV)350,240,350
TABS1024   240  K=IQ(I)
TABS1025   250  HTEMP=H(I,K)
TABS1026        H(I,K)=0.
TABS1027        IPL1=I+1
TABS1028        X(I) =0.
TABS1029  C
TABS1030  C     SEARCH IN DEPLETED ROW FOR NEW MAXIMUM
TABS1031  C
TABS1032        DO 320 J=IPL1,N
TABS1033        IF ( X(I)- ABS( H(I,J)) ) 300,300,320
TABS1034   300  X(I) = ABS(H(I,J))
TABS1035        IQ(I)=J
TABS1036   320  CONTINUE
TABS1037        H(I,K)=HTEMP
TABS1038   350  CONTINUE
TABS1039  C
TABS1040        X(IPIV) =0.
TABS1041        X(JPIV) =0.
TABS1042  C
TABS1043  C     CHANGE THE OTHER ELEMENTS OF H
TABS1044  C
TABS1045        DO 530 I=1,N
TABS1046  C
TABS1047        IF(I-IPIV)370,530,420
TABS1048   370  HTEMP = H(I,IPIV)
TABS1049        H(I,IPIV) = COSINE*HTEMP + SINE*H(I,JPIV)
TABS1050        IF ( X(I) -  ABS( H(I,IPIV)) )380,390,390
TABS1051   380  X(I) = ABS(H(I,IPIV))
TABS1052        IQ(I) = IPIV
TABS1053   390  H(I,JPIV) = -SINE*HTEMP + COSINE*H(I,JPIV)
TABS1054        IF ( X(I) -  ABS( H(I,JPIV)) ) 400,530,530
TABS1055   400  X(I) = ABS(H(I,JPIV))
TABS1056        IQ(I) = JPIV
TABS1057        GO TO 530
TABS1058  C
TABS1059   420  IF(I-JPIV)430,530,480
TABS1060   430  HTEMP = H(IPIV,I)
TABS1061        H(IPIV,I) = COSINE*HTEMP + SINE*H(I,JPIV)
TABS1062        IF ( X(IPIV) -  ABS( H(IPIV,I)) ) 440,450,450
TABS1063   440  X(IPIV) = ABS(H(IPIV,I))
TABS1064        IQ(IPIV) = I
TABS1065   450  H(I,JPIV) = -SINE*HTEMP + COSINE*H(I,JPIV)
TABS1066        IF ( X(I) -  ABS( H(I,JPIV)) ) 400,530,530
TABS1067  C
TABS1068   480  HTEMP = H(IPIV,I)
TABS1069        H(IPIV,I) = COSINE*HTEMP + SINE*H(JPIV,I)
TABS1070        IF ( X(IPIV) -  ABS( H(IPIV,I)) ) 490,500,500
TABS1071   490  X(IPIV) = ABS(H(IPIV,I))
TABS1072        IQ(IPIV) = I
TABS1073   500  H(JPIV,I) = -SINE*HTEMP + COSINE*H(JPIV,I)
TABS1074        IF ( X(JPIV) -  ABS( H(JPIV,I)) ) 510,530,530
TABS1075   510  X(JPIV) = ABS(H(JPIV,I))
TABS1076        IQ(JPIV) = I
TABS1077   530  CONTINUE
TABS1078  C
TABS1079  C     TEST FOR COMPUTATION OF EIGENVECTORS
TABS1080  C
TABS1081        IF(IEGEN)40,540,40
TABS1082   540  DO 550 I=1,N
TABS1083        HTEMP=U(I,IPIV)
TABS1084        U(I,IPIV)=COSINE*HTEMP+SINE*U(I,JPIV)
TABS1085   550  U(I,JPIV)=-SINE*HTEMP+COSINE*U(I,JPIV)
TABS1086        GO TO 40
TABS1087  1000  RETURN
TABS1088        END
```

```
TABS1089        SUBROUTINE TABDY(F,PA,X,T,MSS)
TABS1090  C     EVALUATION OF 3D TIME-DEPENDENT LATERAL DISPLACEMENTS
TABS1091        DIMENSION F(MSS,1),PA(2,1),X(1),T(1)
TABS1092        COMMON/GEN/ NST,NDF,NTF,NLD,NAT,NFQ,NSD,BHED(9),FHED(9),NSS,I3,IS
TABS1093       1            ,RLAB(3)
TABS1094        COMMON/DYN/NTIME,DT,NPC,DAMP
TABS1095  C     ZERO DISPLACEMENTS AND READ GROUND ACCELERATIONS
TABS1096        DO 100 I=1,MSS
TABS1097        DO 100 K=1,NTIME
TABS1098   100  F(I,K+5)=0.0
TABS1099        READ (5,1000) (PA(1,I),PA(2,I),I=1,NPC)
TABS1100        WRITE(6,2000) (PA(1,I),PA(2,I),I=1,NPC)
TABS1101  C
TABS1102  C     CHECK GROUND ACCELERATION DATA
TABS1103  C
TABS1104        DO 120 I=2,NPC
TABS1105        IF (PA(1,I).GT.PA(1,I-1)) GO TO 120
TABS1106        WRITE (6,3001) PA(1,I-1),PA(1,I)
TABS1107        STOP
TABS1108   120  CONTINUE
TABS1109        TIME=NTIME
TABS1110        TIME=TIME*DT
TABS1111        ATIME=PA(1,NPC)-PA(1,1)
TABS1112        IF(ATIME.GE.TIME) GO TO 150
TABS1113        WRITE (6,3000)
TABS1114        STOP
TABS1115  C
TABS1116  C     FOR EACH MODE CALCULATE RESPONSE AND TOTAL DISPLACEMENTS
TABS1117  C
TABS1118   150  REWIND 1
TABS1119        DO 300 L=1,NFQ
TABS1120        READ (1) W,DAMP,(T(K),K=1,MSS)
TABS1121        CALL TABRI (PA,X,W,NTIME,NPC,DT,DAMP)
TABS1122        DO 200 I=1,MSS
TABS1123        DO 200 J=1,NTIME
TABS1124   200  F(I,J+5)=F(I,J+5)+T(I)*X(J)
```

```
TABS1125    300 CONTINUE
TABS1126  C
TABS1127        RETURN
TABS1128   1000 FORMAT(2F10.0)
TABS1129   2000 FORMAT (///26H GROUND ACCELERATION CARDS //
TABS1130       1          11X,4HTIME,3X,12HACCELERATION  /(2F15.4))
TABS1131   3000 FORMAT (44H1GROUND ACCELERATION TIME SPAN IS LESS THAN
TABS1132       1 32HSPECIFIED BUILDING RESPONSE TIME  )
TABS1133   3001 FORMAT (32H0 INCONSISTENT ACCELERATION DATA //
TABS1134       1 34H  TIMES MUST INCREASE SEQUENTIALLY //
TABS1135       2 16H  ERROR AT TIMES  F12.5/16X,F12.6)
TABS1136        END
```

```
TABS1137        SUBROUTINE TABRI(PA,X,PERD,NTIME,NPC,DDT,DAMP)
TABS1138        DIMENSION PA(2,1),X(1)
TABS1139  C
TABS1140  C     EVALUATION OF MODAL RESPONSE ... USING EXPLICIT INTEGRATION
TABS1141  C
TABS1142        W=8.0*ATAN(1.0)/PERD
TABS1143        WW=W*W
TABS1144        ZW=DAMP*W
TABS1145        TZW=2.*ZW
TABS1146        WD=W*SQRT(1.0-DAMP**2)
TABS1147        FB=TZW/(WW*WW)
TABS1148        FA=ZW/WW
TABS1149        FV=ZW*WW
TABS1150        FVD=WW*(2.*DAMP**2-1.0)
TABS1151        FBB=(2.*DAMP**2-1.0)/WW
TABS1152  C
TABS1153        L=0
TABS1154        II=1
TABS1155        VO=0.
TABS1156        VDO=0.
TABS1157        TO=PA(1,1)
TABS1158     10 DT=DDT
TABS1159     50 B=(PA(2,II+1)-PA(2,II))/(PA(1,II+1)-PA(1,II))
TABS1160        A=PA(2,II)+B*(TO-PA(1,II))
TABS1161        TT=TO+DT
TABS1162        IF(PA(1,II+1).GT.TT) GO TO 100
TABS1163        DELT=PA(1,II+1)-TO
TABS1164        GO TO 200
TABS1165    100 DELT=DT
TABS1166  C
TABS1167    200 EX=EXP(-ZW*DELT)
TABS1168        FT=WD*DELT
TABS1169        CS=COS(FT)
TABS1170        SN=SIN(FT)
TABS1171        VT=(VDO+ZW*VO-FA*A+FBB*B)*SN/WD
TABS1172        VT=VT+(VO-A/WW+FB*B)*CS
TABS1173        VT=VT*EX+A/WW-FB*B+B*DELT/WW
TABS1174  C
TABS1175        VDT=(A-WW*VO-ZW*(VDO+B/WW))*SN/WD
TABS1176        VDT=EX*((VDO-B/WW)*CS+VDT)+B/WW
TABS1177  C
TABS1178        VDDT=(B+FV*VO+FVD*VDO-ZW*A)/WD
TABS1179        VDDT=EX*((A-WW*VO-TZW*VDO)*CS+VDDT*SN)
TABS1180  C
TABS1181        VO=VT
TABS1182        VDO=VDT
TABS1183
TABS1184        IF(PA(1,II+1).GT.TT) GO TO 500
TABS1185        DT=DT-DELT
TABS1186        II=II+1
TABS1187        TO=PA(1,II)
TABS1188        IF(DT.EQ.0.) GO TO 600
TABS1189        GO TO 50
TABS1190  C
TABS1191    500 TO=TO+DT
TABS1192    600 L=L+1
TABS1193        X(L)=VT
TABS1194        IF(L.LT.NTIME) GO TO 10
TABS1195  C
TABS1196        RETURN
TABS1197        END
```

```
TABS1198        SUBROUTINE TABD (SD,R,D,RF,A,MSS,MTF,MLD,MST,HED)
TABS1199        DIMENSION SD(MST,8),R(MSS,MLD),D(MST,MTF),RF(MST,MLD),A(MTF,5)
TABS1200       1  ,HED(MTF,4)
TABS1201        COMMON/GEN/ NST,NDF,NTF,NLD,NAT,NFQ,NSD,BHED(9),FHED(9),NSS,I3,IS
TABS1202       1            ,RLAB(3)
TABS1203        COMMON/JUNK/ AI(3)
TABS1204  C
TABS1205  C     COMPUTE FRAME DISPLACEMENTS FROM STRUCTURE DISPLACEMENTS
TABS1206  C
TABS1207        READ (2) A,D,HED
TABS1208        REWIND 2
TABS1209  C
TABS1210        DO 500 K=1,NTF
TABS1211        I=NTF+1-K
TABS1212        IF=A(I,1)
TABS1213        IFC=A(I,2)
TABS1214        AI(1)=A(I,3)
TABS1215        AI(2)=A(I,4)
TABS1216        NT=A(I,5)
TABS1217        DO 300 L=1,MLD
TABS1218        DO 300 N=NT,NST
TABS1219        NN=I3*(N-1)
TABS1220        AI(3)=-D(N,I)
TABS1221        DD=0.
TABS1222        DO 200 J=1,I3
TABS1223    200 DD=DD+R(NN+J,L)*AI(J+IS)
TABS1224    300 RF(N,L)=DD
TABS1225  C
TABS1226        NS=NST-NT+1
TABS1227        WRITE (2) IF,IFC,NS,((RF(N,L),N=NT,NST),L=1,MLD),(HED(I,J),J=1,4)
TABS1228    500 CONTINUE
TABS1229        RETURN
TABS1230        END
```

```
TABS1231        SUBROUTINE TABP (MTOT)
TABS1232        COMMON A(1)
TABS1233        COMMON /GEN/ NST,NDF,NTF,NLD,NAT,NFQ
TABS1234        COMMON /JUNK/ FHED(4),IF,IFC,SPACF(17),II
TABS1235        COMMON/ DYN / NTIME,DT,NPC,DAMP
TABS1236  C
TABS1237  C     OUTPUT DISPLACEMENTS AND FORCES
TABS1238  C
TABS1239        NO=1+2*NST
TABS1240        CALL TABC(A(NO),NLD)
TABS1241  C
TABS1242        REWIND 2
TABS1243        KO=0
TABS1244        M=0
TABS1245        MLD=5+NFQ
TABS1246        IF (NAT.EQ.4) MLD=5+NTIME
TABS1247        N1=NO+8*NLD
TABS1248  C
TABS1249        DO 500 I=1,NTF
TABS1250        II=NTF+1-I
TABS1251        CALL TABU(A(N1),A(NO),NST,NLD,MLD,NAT)
TABS1252        IF(IF.EQ.M) GO TO 200
TABS1253        IF(KO.EQ.0) GO TO 100
```

```
TABS1254          IF(KO.NE.1) GO TO 100
TABS1255          DO 50 K=1,NBK
TABS1256       50 BACKSPACE 3
TABS1257      100 BACKSPACE 3
TABS1258          READ  (3)  M,NC,NS,NCP,NBP,NFEF,NPAN
TABS1259          BACKSPACE 3
TABS1260    C
TABS1261          KO=1
TABS1262      200 IF(IFC.NE.0) GO TO 500
TABS1263          IF(KO.NE.2) GO TO 300
TABS1264          DO 250 K=1,NS
TABS1265      250 READ (3) XX
TABS1266    C
TABS1267      300 MM=2*NC
TABS1268          CALL SECOND (TS)
TABS1269          NB=NC-1
TABS1270          NN=4*NC+NS+1
TABS1271          N2=N1+NST*MLD
TABS1272          N3=N2+NB
TABS1273          N4=N3+5*NCP
TABS1274          N5=N4+5*NBP
TABS1275          N6=N5+7*NFEF
TABS1276          N7=N6+NB*NS
TABS1277          N8=N7+NS*NB*3
TABS1278          N9=N8+NS*NC
TABS1279          N10=N9+2*NPAN
TABS1280          N11=N10+NN*MM
TABS1281          N12=N11+NN*MLD
TABS1282          N13=N12+NFEF
TABS1283          N14=N13+5*NPAN
TABS1284          IF(N14.GT.MTOT) CALL TABR (N14-MTOT)
TABS1285          CALL TABO(A(1),A(N0),A(N1),A(N2),A(N3),A(N4),A(N5),A(N6),A(N7),
TABS1286         1A(N8),A(N9),A(N10),A(N11),NST,NB,NC,NCP,NBP,NS,NFEF,NPAN,A(N12),
TABS1287         2 A(N13),NN,MM,NLD,MLD,KO)
TABS1288          CALL SECOND (TE)
TABS1289          TE=TE-TS
TABS1290          II=NTF+1-I
TABS1291          WRITE (6,2000) II,TE
TABS1292          KO =2
TABS1293      500 NBK=NS+1
TABS1294          RETURN
TABS1295    C
TABS1296     2000 FORMAT (12H0...FRAME NO I3,3H... /
TABS1297         1   4X,38HTIME REQUIRED FOR STRESS COMPUTATION = F6.2)
TABS1298          END
```

```
TABS1299          SUBROUTINE TABC(XM,NLD)
TABS1300          DIMENSION XM(8,NLD)
TABS1301    C
TABS1302          WRITE (6,2000)
TABS1303          DO 100 L=1,NLD
TABS1304          READ  (5,1000) (XM(I,L),I=1,8)
TABS1305      100 WRITE (6,2001) L,(XM(I,L),I=1,8)
TABS1306          WRITE (6,2002)
TABS1307          RETURN
TABS1308    C
TABS1309     1000 FORMAT (8F10.0)
TABS1310     2000 FORMAT (32H1LOAD CONDITION DEFINITION CARDS / 5HOLOAD
TABS1311         1 11X1HI  10X2HII   9X3HIII 11X1HA 11X1HB 12H  SPECTRUM-1 12H  SPECTR
TABS1312         1UM-2  12H    RESPONSE )
TABS1313     2001 FORMAT (I5,8F12.2)
TABS1314     2002 FORMAT (////43H SPECTRUM-1... ROOT MEAN SQUARE COMBINATION  //
TABS1315         1  37H SPECTRUM-2... SUM OF ABSOLUTE VALUES  )
TABS1316    C
TABS1317          END
```

```
TABS1318          SUBROUTINE TABU (U,XM,NST,NLD,MLD,NAT)
TABS1319    C
TABS1320          DIMENSION U(NST,MLD),XM(8,NLD)
TABS1321          COMMON /JUNK/ FHED(4),IF,IFC,NS,UU(8),UMIN(8),NFRM
TABS1322          COMMON/DYN/NTIME,DT,NPC,DAMP
TABS1323          DATA HD1,HD2 / 3HMAX,3HMIN /
TABS1324    C
TABS1325    C     LOAD CASE COMBINATION AND OUTPUT OF DISPLACEMENTS
TABS1326    C
TABS1327          READ (2) IF,IFC,NS,((U(N,L),N=1,NS),L=1,MLD),FHED
TABS1328          IF (IFC.NE.0) GO TO 600
TABS1329    C
TABS1330          DO 500 LL=1,NLD,8
TABS1331          LH=LL+7
TABS1332          IF (LH.GT.NLD) LH=NLD
TABS1333          IH=LH+1-LL
TABS1334          WRITE (6,2000) NFRM,IF,FHED
TABS1335          IF(NAT.GE.3) WRITE (6,3000)
TABS1336          WRITE (6,2001) (L,L=LL,LH)
TABS1337    C
TABS1338          DO 400 N=1,NS
TABS1339          NL=NS+1-N
TABS1340    C        STATIC DISPLACEMENT COMPONENTS
TABS1341          DO 100 L=LL,LH
TABS1342          I=L-LL+1
TABS1343          UU(I)=0.0
TABS1344          DO 100 J=1,5
TABS1345      100 UU(I)=UU(I)+U(N,J)*XM(J,L)
TABS1346          IF(NAT.GE.3) GO TO 150
TABS1347          WRITE (6,2002) NL,(UU(I),I=1,IH)
TABS1348          GO TO 400
TABS1349    C        DYNAMIC DISPLACEMENT COMPONENTS
TABS1350      150 NATT=NAT-3
TABS1351          S1=0.
TABS1352          S2=0.
TABS1353          TH=0.
TABS1354          DO 200 I=6,MLD
TABS1355          UA=ABS(U(N,I))
TABS1356          IF(NATT) 160,160,180
TABS1357      160 S1=S1+UA*UA
TABS1358          S2=S2+UA
TABS1359          GO TO 200
TABS1360      180 IF(UA.GT.TH) TH=UA
TABS1361      200 CONTINUE
TABS1362          S1=SQRT(S1)
TABS1363          DO 250 L=LL,LH
TABS1364          I=L-LL+1
TABS1365          UD=S1*XM(6,L)+S2*XM(7,L)+TH*XM(8,L)
TABS1366          UMIN(I)=UU(I)-UD
TABS1367      250 UU(I)=UU(I)+UD
TABS1368          WRITE (6,2003) NL,HD1,(UU(I),I=1,IH)
TABS1369          WRITE (6,2004)     HD2,(UMIN(I),I=1,IH)
TABS1370      400 CONTINUE
TABS1371    C     PLOT DYNAMIC DISPLACEMENTS
TABS1372          IF (NAT.EQ.4) CALL TABPLT (U(1,6).NST,NTIME,DT)
TABS1373    C
TABS1374      500 CONTINUE
TABS1375    C
TABS1376      600 RETURN
TABS1377    C
TABS1378     2000 FORMAT (24H1...OUTPUT FOR FRAME NO I3,4H ... //
TABS1379         1  10X,12HFRAME TYPE = I3/10X,12HFRAME ID      4A5/
TABS1380         2  32H0..LATERAL FRAME DISPLACEMENTS.. )
TABS1381     2001 FORMAT (6HOLEVEL 7X,8I14)
TABS1382     2002 FORMAT (I6,7X,8F14.7)
TABS1383     2003 FORMAT (I6,2X,A3,2X,8F14.7)
TABS1384     2004 FORMAT (    8X,A3,2X,8F14.7)
TABS1385     3000 FORMAT (23HOMAX...STATIC + DYNAMIC /
TABS1386         1         23H MIN...STATIC - DYNAMIC )
TABS1387          END
```

```
TABS1388          SUBROUTINE TABPLT (U,NST,NTIME,DT)
TABS1389   C
TABS1390   C          PLOT FRAME DISPLACEMENT SHAPES WITH TIME , NAT=4
TABS1391   C
TABS1392          COMMON/JUNK/ FHED(4),DUM(2),NS,P(120)
TABS1393          DIMENSION U(NST,NTIME),TIME(10)
TABS1394          DATA VERT,STAR,HORIZ,BLK,SL/ 1HI,1H*,1H-,1H ,1H/ /
TABS1395   C
TABS1396   C          CONTROL VARIABLES
TABS1397          NPL=10
TABS1398          NMAX=10
TABS1399          RMAX=NMAX
TABS1400          ISPACE=12/(NS+3)
TABS1401          TO=0.0
TABS1402          NLINES=NS*(ISPACE+1)+4
TABS1403          NPP=52/NLINES
TABS1404   C
TABS1405   C          FIND MAXIMUM ABSOLUTE VALUE
TABS1406   C
TABS1407          UMAX=0.
TABS1408          TMAX=0.
TABS1409          DO 100 I=1,NS
TABS1410          DO 100 J=1,NTIME
TABS1411          UM=ABS(U(I,J))
TABS1412          UU=UM-UMAX
TABS1413          IF (UU) 100,100,80
TABS1414       80 UMAX=UM
TABS1415          TMAX=FLOAT(J)*DT
TABS1416      100 CONTINUE
TABS1417          IF(UMAX.NE.0.0) GO TO 110
TABS1418          WRITE (6,2000)
TABS1419          RETURN
TABS1420   C
TABS1421      110 NEWP=0
TABS1422          DO 500 L=1,NTIME,NPL
TABS1423          LH=L+NPL-1
TABS1424          IF(LH.GT.NTIME) LH=NTIME
TABS1425          IF(NEWP.EQ.0) WRITE (6,1000) FHED
TABS1426   C          PRINT TIMES
TABS1427          TIME(1)=TO+DT
TABS1428          I=1
TABS1429          LL=L+1
TABS1430          DO 400 J=LL,LH
TABS1431          I=I+1
TABS1432      400 TIME(I)=TIME(I-1)+DT
TABS1433          TO=TIME(I)
TABS1434          WRITE (6,1003) (TIME(J),J=1,I)
TABS1435          NEWP=NEWP+1
TABS1436          IF(NEWP.EQ.NPP) NEWP=0
TABS1437   C
TABS1438   C          PLOT SHAPES
TABS1439          DO 300 N=1,NS
TABS1440          NPTS=(NMAX+1)*(LH-L+2)-1
TABS1441          DO 150 I=1,NPTS
TABS1442      150 P(I)=BLK
TABS1443          I=0
TABS1444          DO 200 II=L,LH
TABS1445          I=I+NMAX+1
TABS1446          P(I)=VERT
TABS1447          UU=U(N,II)*RMAX/UMAX
TABS1448          IF (UU) 205,210,205
TABS1449      205 UA=ABS(UU)
TABS1450          UU=(UA+0.5)*UU/UA
TABS1451      210 NU=UU
TABS1452      200 P(I+NU)=STAR
TABS1453   C          PRINT
TABS1454          WRITE (6,1001) (P(I),I=1,NPTS)
TABS1455   C          SPACING
TABS1456          IF (ISPACE) 300,300,220
TABS1457      220 DO 240 I=1,ISPACE
TABS1458      240 WRITE (6,1002) (VERT,J=L,LH)
TABS1459      300 CONTINUE
TABS1460   C          BASE LINE
TABS1461          WRITE (6,1001) (HORIZ,I=1,NPTS)
TABS1462          WRITE (6,1005)
TABS1463      500 CONTINUE
TABS1464          WRITE (6,2001) UMAX,TMAX
TABS1465   C
TABS1466          RETURN
TABS1467   C
TABS1468   C      NOTE...CARRIAGE CONTROL CHARACTER X SUPPRESSES SKIP OVER
TABS1469   C      PAGE FOLD - FORMATS 1001,1002
TABS1470   C
TABS1471     1000 FORMAT (28H1 FRAME DISPLACEMENT PLOT...  4A5)
TABS1472     1001 FORMAT (1HX,4X,130A1)
TABS1473     1002 FORMAT (1HX,4X,10(10X,A1))
TABS1474     1003 FORMAT (8HOTIME... 10(4X,F7.3))
TABS1475     1005 FORMAT (/)
TABS1476     2000 FORMAT (37H DISPLACEMENTS ALL ZERO...NOT PLOTTED )
TABS1477     2001 FORMAT (19HOSCALE - ONE INCH = E15.6,9X,13HMAXIMUM AT T=     E15.5/
TABS1478          1 57HONOTE..PLOT IS OF DYNAMIC DISPLACEMENTS ONLY AND DOES NOT /
TABS1479          2 7X,49HINCLUDE ANY SCALING BY LOAD CASE DEFINITION CARDS  )
TABS1480           END
```

```
TABS1481           SUBROUTINE TABO(SD,XM,U,BW,CP,BP,FEF,LB,LDB,LC,LP,S,R,NST,NB,NC,
TABS1482          1 NCP,NBP,NS,NFEF,NPAN,IFEF,PP,NN,MM,NLD,MLD,KO)
TABS1483           DIMENSION BW(NB),CP(5,NCP),BP(5,NBP),FEF(7,NFEF),SD(NST,2),
TABS1484          1 LB(NS,NB),LDB(NS,NB,3),LC(NS,NC),LP(2,NPAN),IFEF(NFEF),PP(5,NPAN)
TABS1485          2 ,S(MM,NN),R(NN,MLD),U(NST,MLD),XM(8,NLD)
TABS1486   C
TABS1487           COMMON /JUNK/ FHED(4),IF,IFC,ND,NF,LM(6),CA(4,6),F(4,8),Q(3,3),
TABS1488          1  P(4),SV(5),T(6)
TABS1489   C
TABS1490   C      SET FOUNDATION DISPLACEMENTS AND LATERAL DISPLACEMENTS
TABS1491   C
TABS1492          IF(KO.EQ.2) GO TO 50
TABS1493          BACKSPACE 3
TABS1494          READ  (3) BW,CP,BP,FEF,LB,LDB,LC,LP,IFEF,PP
TABS1495          BACKSPACE 3
TABS1496       50 MN=4*NC
TABS1497          KL=MM+1
TABS1498          DO 475 L=1,MLD
TABS1499          DO 425 K=1,MN
TABS1500      425 R(K,L)=0.0
TABS1501          DO 450 N=1,NS
TABS1502          KK=MN+N
TABS1503      450 R(KK,L)=U(N,L)
TABS1504      475 R(NN,L)=0.0
TABS1505   C
TABS1506   C      STORY BY STORY  CALCULATION OF MEMBER FORCES
TABS1507   C
TABS1508          DO 100 I=1,4
TABS1509          DO 100 J=1,6
TABS1510      100 CA(I,J)=0.0
TABS1511          N=NS
TABS1512   C
TABS1513   C      CALCULATE ROTATIONS AND VERTICAL DISPLACEMENT AT LEVEL N
TABS1514   C
TABS1515      300 BACKSPACE 3
TABS1516          READ  (3) (((S(I,J),J=1,NN),(R(I,L),L=1,3)),I=1,MM)
TABS1517          BACKSPACE 3
TABS1518   C
TABS1519          DO 310 I=1,5
TABS1520      310 SV(I)=0.
TABS1521          DO 525 II=1,MM
TABS1522          I=MM-II+1
TABS1523          KK=I+1
TABS1524          DO 525 K=KK,NN
TABS1525          DO 525 L=1,MLD
TABS1526      525 R(I,L)=R(I,L)-S(I,K)*R(K,L)
TABS1527   C
TABS1528   C      CALCULATE COLUMN FORCES
TABS1529   C
TABS1530          LV=NS -N+1
```

```
TABS1531          K=NST-NS
TABS1532          WRITE (6,2000) FHED,IF,LV,SD(N+K,1)
TABS1533          WRITE (6,2001)
TABS1534          NF=4
TABS1535          ND=6
TABS1536          DO 500 M=1,NC
TABS1537          MC=LC(N,M)
TABS1538          IF(MC.EQ.NCP) GO TO 500
TABS1539          A=0.0
TABS1540          XL =SD(N+K,2)
TABS1541          IF (NB.EQ.0) GO TO 420
TABS1542          MR=LB(N,M)
TABS1543          IF (M.EQ.1) GO TO 400
TABS1544          ML=LB(N,M-1)
TABS1545          IF (M.EQ.NC) GO TO 410
TABS1546          A=(BP(5,ML)+BP(5,MR))/2.
TABS1547          GO TO 420
TABS1548      400 A=BP(5,MR)
TABS1549          GO TO 420
TABS1550      410 A=BP(5,ML)
TABS1551      420 XL=XL-A
TABS1552          BB=0.0
TABS1553          IF ( CP(4,MC) ) 430,430,429
TABS1554      429 BB=14.4*CP(3,MC)/(XL**2*CP(4,MC))
TABS1555      430 COMM=2.*CP(1,MC)*CP(3,MC)/(XL*(1.+2.*BB))
TABS1556          SA=COMM*(2.+BB)
TABS1557          SB=COMM*(1.-BB)
TABS1558          SC=CP(2,MC)*CP(1,MC)/XL
TABS1559          CALL TABZ(SA,SB,SC,XL,A,0.0)
TABS1560          DO 435 I=1,4
TABS1561      435 CA(4,I)=-(CA(1,I)+CA(2,I))/XL
TABS1562          LM(3)=2*M
TABS1563          LM(1)=LM(3)+MM
TABS1564          LM(5)=LM(1)-1
TABS1565          LM(6)=LM(3)-1
TABS1566          LM(4)=MN+N
TABS1567          LM(2)=LM(4)+1
TABS1568          CALL TABW(R,XM,NN,NLD,MLD,M)
TABS1569          WRITE (6,2005)
TABS1570          DO 440 I=1,5
TABS1571      440 SV(I)=SV(I)+F(4,I)
TABS1572      500 CONTINUE
TABS1573    C
TABS1574    C     CALCULATE BEAM FORCES
TABS1575    C
TABS1576          IF(NB.EQ.0) GO TO 565
TABS1577          WRITE (6,2002)
TABS1578          NF=2
TABS1579          ND=4
TABS1580          DO 600 M=1,NB
TABS1581          MB=LB(N,M)
TABS1582          IF(MB.EQ.NBP) GO TO 600
TABS1583          ML=LC(N,M)
TABS1584          MR=LC(N,M+1)
TABS1585          A=CP(5,MR)/2.
TABS1586          B=CP(5,ML)/2.
TABS1587          XL=BW(M)-A-B
TABS1588          EIOL=BP(1,MB)*BP(2,MB)/XL
TABS1589          SA=BP(3,MB)*EIOL
TABS1590          SB=BP(4,MB)*SA
TABS1591          CALL TABZ(SA,SB,0.0,XL,A,B)
TABS1592          LM(1)=2*M
TABS1593          LM(2)=LM(1)-1
TABS1594          LM(3)=LM(1)+2
TABS1595          LM(4)=LM(3)-1
TABS1596          DO 540 L=1,3
TABS1597          DO 528 I=1,2
TABS1598      528 Q(I,L)=0.
TABS1599          J=LDB(N,M,L)
TABS1600          IF (J) 540,540,530
TABS1601      530 V=FEF(5,J)*XL/2.
TABS1602          YM=V*XL/6.
TABS1603          Q(1,L)=-FEF(1,J)-YM
TABS1604          Q(2,L)=+FEF(3,J)+YM
TABS1605      540 Q(3,L)=0.0
TABS1606          CALL TABW(R,XM,NN,NLD,MLD,M)
TABS1607          WRITE (6,2005)
TABS1608      550 CONTINUE
TABS1609      600 CONTINUE
TABS1610    C
TABS1611    C     CALCULATE PANEL FORCES
TABS1612    C
TABS1613          IF(NPAN.EQ.0) GO TO 565
TABS1614          DO 770 L=1,NPAN
TABS1615          NP=NS-LP(1,L)+1
TABS1616          IF(NP.NE.N) GO TO 770
TABS1617          WRITE (6,2003)
TABS1618          GO TO 772
TABS1619      770 CONTINUE
TABS1620          GO TO 565
TABS1621      772 NF=4
TABS1622          ND=6
TABS1623          DO 800 L=1,NPAN
TABS1624          NP=NS-LP(1,L)+1
TABS1625          IF(NP.NE.N) GO TO 800
TABS1626          M=LP(2,L)
TABS1627          XL=SD(N+K,2)
TABS1628          D=BW(M)
TABS1629          BB=XL**2*PP(4,L)*PP(5,L)
TABS1630          IF (BB) 730,730,725
TABS1631      725 BB=6.0*PP(1,L)*PP(3,L)/BB
TABS1632      730 COMM=2.0*PP(1,L)*PP(3,L)/(XL*(1.+2.*BB))
TABS1633          SA=COMM*(2.+BB)
TABS1634          SB=COMM*(1.-BB)
TABS1635          SC=PP(1,L)*PP(2,L)/XL
TABS1636          CALL TABPN (2,SA,SB,SC,XL,D,SS,CA,T)
TABS1637          LM(2)=MN+N
TABS1638          LM(1)=LM(2)+1
TABS1639          LM(5)=2*M-1
TABS1640          LM(6)=LM(5)+2
TABS1641          LM(3)=LM(5)+MM
TABS1642          LM(4)=LM(6)+MM
TABS1643          CALL TABW (R,XM,NN,NLD,MLD,M)
TABS1644          WRITE (6,2005)
TABS1645          DO 785 I=1,6
TABS1646          DO 785 J=1,4
TABS1647      785 CA(J,I)=0.
TABS1648          DO 790 I=1,5
TABS1649      790 SV(I)=SV(I)+F(4,I)
TABS1650      800 CONTINUE
TABS1651    C
TABS1652    C     SHIFT DISPLACEMENTS
TABS1653    C
TABS1654      565 DO 570 K=1,MM
TABS1655          KK=MM+K
TABS1656          DO 570 L=1,MLD
TABS1657          R(KK,L)=R(K,L)
TABS1658      570 R(K,L)=0.0
TABS1659          WRITE (6,2004) SV
TABS1660    C
TABS1661      610 N=N-1
TABS1662          IF (N.NE.0) GO TO 300
TABS1663    C
TABS1664      810 RETURN
TABS1665    C
TABS1666     2000 FORMAT (21H1MEMBER FORCES ..... ,9HFRAME ID  4A5,10X,10HFRAME TYPE
TABS1667         1 I3//21X,8HLEVEL NO I3,3X,3H... 3X,9HLEVEL ID   A5)
TABS1668     2001 FORMAT      ( 62HO  COL  LOAD        BOTTOM-MOMENT      TOP-MOMENT
TABS1669         1  AXIAL FORCE  ,4X,11HSHEAR FORCE )
TABS1670     2002 FORMAT      ( 47H  BEAM  LOAD          LEFT-MOMENT   RIGHT-MOMENT )
TABS1671     2003 FORMAT (7H PANELS /12H   BAY  LOAD 7X,13HBOTTOM-MOMENT 5X,
TABS1672         1 10HTOP-MOMENT 4X,11HAXIAL-FORCE 4X,11HSHEAR-FORCE )
TABS1673     2004 FORMAT (31HO STORY SHEARS   LOAD CASES   I,13X,2HII,13X,3HIII,13X,
TABS1674         1  1HA,14X,1HB / 20X,5F15.4)
TABS1675     2005 FORMAT (1H )
TABS1676          END
```

```
TABS1677          SUBROUTINE TABZ(SA,SB,SC,XL,A,B)
TABS1678          COMMON /JUNK/ FHED(4),IF,IFC,ND,NF,LM(6),CA(4,6),F(4,8),T(2,4)
TABS1679   C
TABS1680   C      FORM DISPLACEMENT-MEMBER FORCE TRANSFORMATION MATRIX
TABS1681   C      FOR BEAMS AND COLUMNS
TABS1682   C
TABS1683          T(2,1)=B/XL
TABS1684          T(1,1)=1.0+T(2,1)
TABS1685          T(1,2)=1.0/XL
TABS1686          T(2,2)=T(1,2)
TABS1687          T(1,3)=A/XL
TABS1688          T(2,3)=1.0+T(1,3)
TABS1689          T(1,4)=-T(1,2)
TABS1690          T(2,4)=T(1,4)
TABS1691   C
TABS1692          DO 100 I=1,4
TABS1693          CA(1,I)=SA*T(1,I)+SB*T(2,I)
TABS1694      100 CA(2,I)=SB*T(1,I)+SA*T(2,I)
TABS1695          CA(3,5)=SC
TABS1696          CA(3,6)=-SC
TABS1697      120 RETURN
TABS1698          END
```

```
TABS1699          SUBROUTINE TABW(R,XM,NN,NLD,MLD,M)
TABS1700          DIMENSION R(NN,MLD),XM(8,NLD)
TABS1701          COMMON /JUNK/ FHED(4),IF,IFC,ND,NF,LM(6),CA(4,6),F(4,8),Q(3,3),
TABS1702         1  P(4),SV(5),T(6),PMIN(4)
TABS1703          COMMON/GEN/ FIL(4),NAT,FIL2(26)
TABS1704          DATA HD1,HD2 / 3HMAX,3HMIN /
TABS1705   C
TABS1706   C      LOAD CASE COMBINATION AND OUTPUT OF MEMBER FORCES
TABS1707   C
TABS1708          DO 100 I=1,NF
TABS1709          DO 100 J=1,8
TABS1710      100 F(I,J)=0.0
TABS1711          IF(ND.NE.4) GO TO 150
TABS1712          DO 120 L=1,3
TABS1713          F(1,L)=Q(1,L)
TABS1714      120 F(2,L)=Q(2,L)
TABS1715   C
TABS1716   C      CALCULATE STATIC FORCES
TABS1717   C
TABS1718      150 DO 200 K=1,ND
TABS1719          KK=LM(K)
TABS1720          DO 200 I=1,NF
TABS1721          DO 200 J=1,5
TABS1722      200 F(I,J)=F(I,J)+CA(I,K)*R(KK,J)
TABS1723   C
TABS1724   C      CALCULATE DYNAMIC FORCES
TABS1725   C
TABS1726          NATT=NAT-3
TABS1727          IF (NATT) 550,250,250
TABS1728      250 DO 500 I=1,NF
TABS1729          DO 400 J=6,MLD
TABS1730          X=0.0
TABS1731          DO 300 K=1,ND
TABS1732          KK=LM(K)
TABS1733      300 X=X+CA(I,K)*R(KK,J)
TABS1734          XA=ABS(X)
TABS1735          IF (NATT) 330,330,350
TABS1736      330 F(I,6)=F(I,6)+XA*XA
TABS1737          F(I,7)=F(I,7)+XA
TABS1738          GO TO 400
TABS1739      350 IF (XA.GT.F(I,8)) F(I,8)=XA
TABS1740      400 CONTINUE
TABS1741      500 F(I,6)=SQRT(F(I,6))
TABS1742   C
TABS1743   C      PRINT MEMBER FORCES FOR ALL LOAD CONDITIONS
TABS1744   C
```

```
TABS1745      550 DO 700 L=1,NLD
TABS1746   C          STATIC FORCE COMPONENTS
TABS1747          DO 600 I=1,NF
TABS1748          P(I)=0.
TABS1749          DO 600 J=1,5
TABS1750      600 P(I)=P(I)+F(I,J)*XM(J,L)
TABS1751          IF(NATT) 610,620,620
TABS1752      610 WRITE (6,2000) M,L,(P(I),I=1,NF)
TABS1753          GO TO 700
TABS1754   C          DYNAMIC FORCE COMPONENTS
TABS1755      620 DO 650 I=1,NF
TABS1756          PI=F(I,6)*XM(6,L)+F(I,7)*XM(7,L)+F(I,8)*XM(8,L)
TABS1757          PMIN(I)=P(I)-PI
TABS1758      650 P(I)=P(I)+PI
TABS1759          WRITE (6,2001) M,L,HD1,(P(I),I=1,NF)
TABS1760          WRITE (6,2002)   L,HD2,(PMIN(I),I=1,NF)
TABS1761      700 CONTINUE
TABS1762   C
TABS1763          RETURN
TABS1764   C
TABS1765     2000 FORMAT (2I6,5X,4F15.4)
TABS1766     2001 FORMAT (2I6,2X,A3,4F15.4)
TABS1767     2002 FORMAT (6X,I6,2X,A3,4F15.4)
TABS1768          END
```

Appendix D

Example Input and Output

LISTING OF DATA DECK

```
COLUMNS
1         10         20         30         40         50         60         70         80
X         X          X          X          X          X          X          X          X
    4     3     8    3     3    6     0    3 DIFF FRAMES  VARIABLE HEIGHT 24/12/72
ROOF       120.       0.5        60000.     100.       100.
35.0                  100.       100.       0.         55.0       100.       100.
THIRD      120.       0.5        60000.     100.       100.

SECND      120.       1.0        90000.     200.       100.

FIRST      120.       1.0        90000.     200.       100.

    1     3     4    1     1    0     0    FRAME TYPE 1  Y-DIRECTION
100.       100.
    1 5000.          80.        5000.      0.         10.
    1 5000.          4000.      4.0        0.5         9.0
    1     3
    1     3
    1     3
    1     3
    1     3
    2     3     2    1     1    0     0    FRAME TYPE 2  Y-DIRECTION
100.       100.
    1 5000.          80.        1000.      0.         10.
    1 5000.          900.       4.0        0.5        10.
    1     1
    1     1
    1     1
    1     1
    1     1
    3     5     4    2     2    1     5    FRAME TYPE 3  X-DIRECTION
100.       100.       100.       100.
    1 5000.          80.        1000.      0.         10.
    2 5000.          70.        800.       0.         7.0
X         X          X          X          X          X          X          X          X
```

```
COLUMNS
1         10         20         30         40         50         60         70         80
X         X          X          X          X          X          X          X          X
    1 5000.          900.       4.0        0.5        9.0
    2  5000.         300000.    4.0        0.5         9.0
    1     0 200.0    0.7        200.0      0.7
    1     3    1
    2     3
    0     1
    2     1
    0     1
    1     1
    2     1
    1     1
    0     2
    1     0
    0     3
    0     1
    1     1
    0     1
    1     1
    4     2 5000.    400.0      600000.    350.       2000.
    3     2 5000.    400.0      600000.    350.       2000.
    2     2 5000.    400.0      600000.    350.       2000.
    2     3 5000.    400.0      600000.    350.       2000.
    1     3 5000.    400.0      600000.    350.       2000.
    1     1 0.0       0.0        0.0        100.          TYPE 1  Y-DIRECTION
    1     1 100.      0.0        100.       100.          TYPE 1  Y-DIRECTION
    1     0 200.      0.0        200.       100.          TYPE 1  Y-DIRECTION
    2     1 300.      0.0        300.       100.          TYPE 2  Y-DIRECTION
    2     0 400.      0.0        400.       100.          TYPE 2  Y-DIRECTION
    3     0 0.0       100.       100.       0.0           TYPE 3  X-DIRECTION
    3     1 0.0       100.       100.       100.          TYPE 3  X-DIRECTION
    3     1 0.0       200.       100.       200.          TYPE 3  X-DIRECTION
X         X          X          X          X          X          X          X          X
```

```
COLUMNS
1         10         20         30         40         50         60         70         80
X         X          X          X          X          X          X          X          X
    4  0.8           0.0           ACCELERATION SPECTRUM
0.0       0.2
1.0       0.6
1.8       0.4
20.       0.1
1.0       C.         0.         1.0        0.         0.         0.         0.
0.        0.         0.         0.         1.0        0.         0.         0.
0.        0.         0.         0.         0.         1.0        0.         0.
X         X          X          X          X          X          X          X          X
```

3 DIFF FRAMES VARIABLE HEIGHT 24/12/72

TOTAL NUMBER OF STORIES-- 4
NUMBER OF DIFF. FRAMES--- 3
TOTAL NUMBER OF FRAMES--- 8
NUMBER OF LOAD CONDITIONS 3
TYPE OF ANALYSIS--------- 3
NUMBER OF FREQUENCIES---- 6
STORY TRANSLATION CODE--- 0

STORY DATA

LEVEL NO.	ID	HEIGHT	MASS(M)	MR**2	X(M)	Y(M)	K-X	K-Y
4	ROOF	120.00	.50	60000.00	100.00	100.00	-0.	-0.
3	THIRD	120.00	.50	60000.00	100.00	100.00	-0.	-0.
2	SECND	120.00	1.00	90000.00	200.00	100.00	-0.	-0.
1	FIRST	120.00	1.00	90000.00	200.00	100.00	-0.	-0.

STRUCTURE LATERAL LOADS...CASES A AND B

LEVEL NO.	RX-A	RY-A	M-A	RX-B	RY-B	M-B	XA	YA	XB	YB
4	35.00	-0.	0.	0.	55.00	0.	100.0	100.0	100.0	100.0
3	-0.	-0.	0.	-0.	-0.	0.	-0.	-0.	-0.	-0.
2	-0.	-0.	0.	-0.	-0.	0.	-0.	-0.	-0.	-0.
1	-0.	-0.	0.	-0.	-0.	0.	-0.	-0.	-0.	-0.

FRAME TYPE 1 Y-DIRECTION

FRAME ID NUMBER---------- 1
NUMBER OF COLUMN LINES--- 3
NUMBER OF STORY LEVELS--- 4
NUMBER OF DIFF. COL. PROP 1
NUMBER OF DIFF. BEAM PROP 1
NUMBER OF DIFF. FEF------ 0
NUMBER OF PANEL ELEMENTS- 0

BAY WIDTHS
100.000 100.000

COLUMN ID	E	A	I	SA	W
1	5000.00	80.00	5000.00	0.	10.00

BEAM ID	E	I	K	C	D
1	5000.00	4000.00	4.00	.50	9.00

BEAM LOCATIONS

LEVEL	M	BID	GEN	VL1	VL2	VL3
4	1	1	3	-0	-0	-0
4	2	1	3	-0	-0	-0

GENERATED BEAM LOCATIONS

STORY	1	2
1	1	1
2	1	1
3	1	1
4	1	1

COLUMN LOCATIONS

LEVEL	M	CID	GEN
4	1	1	3
4	2	1	3
4	3	1	3

GENERATED COLUMN LOCATIONS

STORY	1	2	3
1	1	1	1
2	1	1	1
3	1	1	1
4	1	1	1

...FRAME TYPE 1 ...
TIME REQUIRED TO FORM STIFFNESS = .32

FRAME TYPE 2 Y-DIRECTION

FRAME ID NUMBER---------- 2
NUMBER OF COLUMN LINES--- 3
NUMBER OF STORY LEVELS--- 2
NUMBER OF DIFF. COL. PROP 1
NUMBER OF DIFF. BEAM PROP 1
NUMBER OF DIFF. FEF------ 0
NUMBER OF PANEL ELEMENTS- 0

BAY WIDTHS
100.000 100.000

COLUMN ID	E	A	I	SA	W
1	5000.00	80.00	1000.00	0.	10.00

BEAM ID	E	I	K	C	D
1	5000.00	900.00	4.00	.50	10.00

BEAM LOCATIONS

LEVEL	M	BID	GEN	VL1	VL2	VL3
2	1	1	1	-0	-0	-0
2	2	1	1	-0	-0	-0

GENERATED BEAM LOCATIONS

STORY	1	2
1	1	1
2	1	1

COLUMN LOCATIONS

LEVEL	M	CID	GEN
2	1	1	1
2	2	1	1
2	3	1	1

GENERATED COLUMN LOCATIONS

STORY	1	2	3
1	1	1	1
2	1	1	1

...FRAME TYPE 2 ...
TIME REQUIRED TO FORM STIFFNESS = .18

```
   FRAME TYPE 3  X-DIRECTION
FRAME ID NUMBER---------   3
NUMBER OF COLUMN LINES---   5
NUMBER OF STORY LEVELS---   4
NUMBER OF DIFF. COL. PROP   2
NUMBER OF DIFF. BEAM PROP   2
NUMBER OF DIFF. FEF------   1
NUMBER OF PANEL ELEMENTS-   5

BAY WIDTHS
      100.000        100.000        100.000        100.000

COLUMN ID          E            A            I           SA            W
        1     5000.00        80.00      1000.00         0.         10.00
        2     5000.00        70.00       800.00         0.          7.00

  BEAM ID          E            I            K            C            D
        1     5000.00       900.00         4.00         .50         9.00
        2     5000.00    300000.00         4.00         .50         9.00

   FEF ID       CODE           ML           VL           MR           VR            W
        1          0      200.000         .700      200.000         .700        -0.

BEAM LOCATIONS

 LEVEL  M  BID  GEN  VL1  VL2  VL3
   4    1    1    3    1   -0   -0

   4    2    2    3   -0   -0   -0

   4    3    0    1   -0   -0   -0
   2    3    2    1   -0   -0   -0

   4    4    0    1   -0   -0   -0
   2    4    1    1   -0   -0   -0

GENERATED BEAM LOCATIONS

STORY   1   2   3   4

  1     1   2   0   0
  2     1   2   0   0
  3     1   2   2   1
  4     1   2   2   1

GENERATED BEAM LOADS...LOAD CASE I

STORY   1   2   3   4

  1     1  -0  -0  -0
  2     1  -0  -0  -0
  3     1  -0  -0  -0
  4     1  -0  -0  -0

GENERATED BEAM LOADS...LOAD CASE II

STORY   1   2   3   4

  1    -0  -0  -0  -0
  2    -0  -0  -0  -0
  3    -0  -0  -0  -0
  4    -0  -0  -0  -0

GENERATED BEAM LOADS...LOAD CASE III

STORY   1   2   3   4

  1    -0  -0  -0  -0
  2    -0  -0  -0  -0
  3    -0  -0  -0  -0
  4    -0  -0  -0  -0

COLUMN LOCATIONS

 LEVEL  M  CID  GEN
   4    1    2    1
   2    1    1    1

   4    2    0    2
   1    2    1    0

   4    3    0    3

   4    4    0    1
   2    4    1    1

   4    5    0    1
   2    5    1    1

GENERATED COLUMN LOCATIONS

STORY   1   2   3   4   5

  1     2   0   0   0   0
  2     2   0   0   0   0
  3     1   0   0   1   1
  4     1   1   0   1   1

PANEL CARDS

LEVEL    M            E            A            I           SA            G
  4      2      5000.00       400.00    600000.00       350.00      2000.00
  3      2      5000.00       400.00    600000.00       350.00      2000.00
  2      2      5000.00       400.00    600000.00       350.00      2000.00
  2      3      5000.00       400.00    600000.00       350.00      2000.00
  1      3      5000.00       400.00    600000.00       350.00      2000.00

...FRAME TYPE  3 ...
   TIME REQUIRED TO FORM STIFFNESS =   .74

FRAME POSITION DATA

FRAME   ID  FORCE CODE          X1          Y1          X2          Y2
  1      1          1          0.          0.          0.     100.000          TYPE 1  Y-DIRECTI
  2      1          1     100.000          0.     100.000     100.000          TYPE 1  Y-DIRECTI
  3      1          0     200.000          0.     200.000     100.000          TYPE 1  Y-DIRECTI
  4      2          1     300.000          0.     300.000     100.000          TYPE 2  Y-DIRECTI
  5      2          0     400.000          0.     400.000     100.000          TYPE 2  Y-DIRECTI
  6      3          0          0.     100.000     100.000          0.          TYPE 3  X-DIRECTI
  7      3          1          0.     100.000     100.000     100.000          TYPE 3  X-DIRECTI
  8      3          1          0.     200.000     100.000     200.000          TYPE 3  X-DIRECTI

STRUCTURE DISPLACEMENTS                                  LOAD CASES

LEVEL   ID   DIRN          I           II          III           A           B

  4    ROOF    X      -.018520        0.           0.        .073504     .048444
  4    ROOF    Y       .001455        0.           0.        .030828     .191540
  4    ROOF  ROTN      .000015        0.           0.       -.000219    -.000507

  3    THIRD   X      -.008948        0.           0.        .034820     .029524
  3    THIRD   Y       .000922        0.           0.        .018595     .113791
  3    THIRD ROTN      .000007        0.           0.       -.000121    -.000338

  2    SECND   X      -.003753        0.           0.        .013964     .013523
  2    SECND   Y       .000229        0.           0.        .013444     .067614
  2    SECND ROTN      .000003        0.           0.       -.000050    -.000155

  1    FIRST   X      -.001349        0.           0.        .005354     .005113
  1    FIRST   Y       .000082        0.           0.        .005116     .025567
  1    FIRST ROTN      .000001        0.           0.       -.000020    -.000061
```

MODE NUMBER	PERIOD
1	.865688
2	.355911
3	.263707
4	.205995
5	.165349
6	.139553

MODE SHAPES

LEVEL	ID	DIRN	1	2	3	4	5	6
4	ROOF	X	-.110831	.169517	.467619	1.127457	-.020147	-.018331
4	ROOF	Y	-.184716	.618774	.840628	-.449184	.306860	-.040902
4	ROOF	ROTN	.003329	.001667	-.000388	.000105	-.001251	.000887
3	THIRD	X	-.066555	.140551	.213306	.515631	-.126409	.086071
3	THIRD	Y	-.130994	.486486	.407174	-.276195	-.103525	.152097
3	THIRD	ROTN	.001844	-.000243	.000265	.000291	.002534	-.002416
2	SECND	X	-.031424	.113555	.025185	.225978	-.038272	-.067625
2	SECND	Y	-.149835	.482251	-.144668	-.059324	-.081761	-.326944
2	SECND	ROTN	.000813	-.001194	.001578	-.000267	.000663	.001493
1	FIRST	X	-.013020	.058388	-.017332	.102695	.068337	.054567
1	FIRST	Y	-.062152	.255135	-.188565	.035881	.363250	.254438
1	FIRST	ROTN	.000335	-.000769	.001234	-.000393	-.001751	-.001515

ACCELERATION SPECTRUM ACCELERATION SPECTRUM

NUMBER OF PERIOD CARDS = 4
SCALE FACTOR = .800
ANGLE OF EQ INCIDENCE = 0.

PERIOD	ACCELERATION
0.	.200
1.000	.600
1.800	.400
20.000	.100

LOAD CONDITION DEFINITION CARDS

LOAD	I	II	III	A	B	SPECTRUM-1	SPECTRUM-2	RESPONSE
1	1.00	0.	0.	1.00	0.	0.	0.	0.
2	0.	0.	0.	0.	1.00	0.	0.	0.
3	0.	0.	0.	0.	0.	1.00	0.	0.

SPECTRUM-1... ROOT MEAN SQUARE COMBINATION

SPECTRUM-2... SUM OF ABSOLUTE VALUES

...OUTPUT FOR FRAME NO 6 ...

FRAME TYPE = 3
FRAME ID TYPE 3 X-DIRECTI

..LATERAL FRAME DISPLACEMENTS..

MAX...STATIC + DYNAMIC
MIN...STATIC - DYNAMIC

LEVEL		1	2	3
4	MAX	.0304974	-.0653466	.0007559
	MIN	.0304974	-.0653466	-.0007559
3	MAX	.0125742	-.0356670	.0003704
	MIN	.0125742	-.0356670	-.0003704
2	MAX	.0043056	-.0163305	.0001440
	MIN	.0043056	-.0163305	-.0001440
1	MAX	.0017999	-.0058444	.0000531
	MIN	.0017999	-.0058444	-.0000531

MEMBER FORCES ..... FRAME ID TYPE 3 X-DIRECTI FRAME TYPE 3

LEVEL NO 1 ... LEVEL ID FIRST

COL	LOAD		BOTTOM-MOMENT	TOP-MOMENT	AXIAL FORCE	SHEAR FORCE
1	1	MAX	27.4165	52.9940	3.4479	-.7244
	1	MIN	27.4165	52.9940	3.4479	-.7244
1	2	MAX	12.4725	11.0586	-6.1876	-.2120
	2	MIN	12.4725	11.0586	-6.1876	-.2120
1	3	MAX	.1157	.1047	.0679	.0020
	3	MIN	-.1157	-.1047	-.0679	-.0020
2	1	MAX	-3.7061	-3.1621	4.7841	.0619
	1	MIN	-3.7061	-3.1621	4.7841	.0619
2	2	MAX	8.0022	2.9925	-27.0722	-.0991
	2	MIN	8.0022	2.9925	-27.0722	-.0991
2	3	MAX	.0709	.0285	.2536	.0009
	3	MIN	-.0709	-.0285	-.2536	-.0009
4	1	MAX	-2.6574	-1.2699	-4.6374	.0354
	1	MIN	-2.6574	-1.2699	-4.6374	.0354
4	2	MAX	7.7136	2.4719	14.3084	-.0918
	2	MIN	7.7136	2.4719	14.3084	-.0918
4	3	MAX	.0703	.0254	.1347	.0008
	3	MIN	-.0703	-.0254	-.1347	-.0008
5	1	MAX	-3.4037	-2.6164	-.3591	.0542
	1	MIN	-3.4037	-2.6164	-.3591	.0542
5	2	MAX	10.2687	7.0821	1.2974	-.1563
	2	MIN	10.2687	7.0821	1.2974	-.1563
5	3	MAX	.0958	.0690	.0118	.0015
	3	MIN	-.0958	-.0690	-.0118	-.0015

BEAM	LOAD		LEFT-MOMENT	RIGHT-MOMENT
1	1	MAX	-136.5458	235.6672
	1	MIN	-136.5458	235.6672
1	2	MAX	-29.2062	-33.1975
	2	MIN	-29.2062	-33.1975
1	3	MAX	.2603	.3018
	3	MIN	-.2603	-.3018
2	1	MAX	-230.6312	34.4796
	1	MIN	-230.6312	34.4796
2	2	MAX	32.8310	-33.7928
	2	MIN	32.8310	-33.7928
2	3	MAX	.2875	.4034
	3	MIN	-.2875	-.4034
3	1	MAX	-34.4796	-3.9179
	1	MIN	-34.4796	-3.9179
3	2	MAX	33.7928	19.0689
	2	MIN	33.7928	19.0689
3	3	MAX	.4034	.2023
	3	MIN	-.4034	-.2023
4	1	MAX	8.3140	7.6477

	1	MIN	8.3140	7.6477
4	2	MAX	-26.7681	-26.4869
	2	MIN	-26.7681	-26.4869
4	3	MAX	.2644	.2412
	3	MIN	-.2644	-.2412

PANELS

BAY	LOAD		BOTTOM-MOMENT	TOP-MOMENT	AXIAL-FORCE	SHEAR-FORCE
3	1	MAX	-622.2176	134.5120	-8.8356	4.0642
	1	MIN	-622.2176	134.5120	-8.8356	4.0642
3	2	MAX	2098.4675	-812.8676	17.6540	-10.7133
	2	MIN	2098.4675	-812.8676	17.6540	-10.7133
3	3	MAX	19.1253	8.0567	.1748	.0978
	3	MIN	-19.1253	-8.0567	-.1748	-.0978

STORY SHEARS	LOAD CASES I	II	III	A	B
	-2.4269	0.	0.	5.9182	-11.2725

PANELS

BAY	LOAD		BOTTOM-MOMENT	TOP-MOMENT	AXIAL-FORCE	SHEAR-FORCE
2	1	MAX	-391.6921	2.7076	9.4666	3.2415
	1	MIN	-391.6921	2.7076	9.4666	3.2415
2	2	MAX	1042.5696	852.8110	-34.6595	-15.7948
	2	MIN	1042.5696	852.8110	-34.6595	-15.7948
2	3	MAX	8.7589	2.9424	.3551	.0835
	3	MIN	-8.7589	-2.9424	-.3551	-.0835
3	1	MAX	-94.5751	-641.4331	-12.9908	6.1334
	1	MIN	-94.5751	-641.4331	-12.9908	6.1334
3	2	MAX	742.7518	1987.6816	28.9267	-22.7536
	2	MIN	742.7518	1987.6816	28.9267	-22.7536
3	3	MAX	5.7651	17.3607	.3087	.1888
	3	MIN	-5.7651	-17.3607	-.3087	-.1888

STORY SHEARS	LOAD CASES I	II	III	A	B
	-3.8919	0.	0.	12.0704	-39.4238

MEMBER FORCES ..... FRAME ID TYPE 3 X-DIRECTI FRAME TYPE 3

LEVEL NO 2 ... LEVEL ID SECND

COL	LOAD		BOTTOM-MOMENT	TOP-MOMENT	AXIAL FORCE	SHEAR FORCE
1	1	MAX	75.0253	73.5555	3.0466	-1.3386
	1	MIN	75.0253	73.5555	3.0466	-1.3386
1	2	MAX	19.7065	18.7090	-5.4942	-.3461
	2	MIN	19.7065	18.7090	-5.4942	-.3461
1	3	MAX	.1704	.1558	.0616	.0029
	3	MIN	-.1704	-.1558	-.0616	-.0029
4	1	MAX	-1.6736	-1.7320	-3.5407	.0307
	1	MIN	-1.6736	-1.7320	-3.5407	.0307
4	2	MAX	6.6890	5.2065	10.5436	-.1072
	2	MIN	6.6890	5.2065	10.5436	-.1072
4	3	MAX	.0582	.0497	.1020	.0010
	3	MIN	-.0582	-.0497	-.1020	-.0010
5	1	MAX	-5.4299	-6.9438	-.1818	.1115
	1	MIN	-5.4299	-6.9438	-.1818	.1115
5	2	MAX	21.0677	25.7895	.6835	-.4221
	2	MIN	21.0677	25.7895	.6835	-.4221
5	3	MAX	.1890	.2324	.0061	.0038
	3	MIN	-.1890	-.2324	-.0061	-.0038

BEAM	LOAD		LEFT-MOMENT	RIGHT-MOMENT
1	1	MAX	-138.4757	239.2898
	1	MIN	-138.4757	239.2898
1	2	MAX	-43.1972	-51.5352
	2	MIN	-43.1972	-51.5352
1	3	MAX	.4298	.5199
	3	MIN	-.4298	-.5199
2	1	MAX	-239.2898	-388.5690
	1	MIN	-239.2898	-388.5690
2	2	MAX	51.5352	613.9435
	2	MIN	51.5352	613.9435
2	3	MAX	.5199	9.2594
	3	MIN	-.5199	-9.2594
3	1	MAX	388.5690	-27.2381
	1	MIN	388.5690	-27.2381
3	2	MAX	-613.9435	61.6536
	2	MIN	-613.9435	61.6536
3	3	MAX	9.2594	.7386
	3	MIN	-9.2594	-.7386
4	1	MAX	9.3201	7.0382
	1	MIN	9.3201	7.0382
4	2	MAX	-35.3394	-26.1714
	2	MIN	-35.3394	-26.1714
4	3	MAX	.3169	.2358
	3	MIN	-.3169	-.2358

MEMBER FORCES ..... FRAME ID TYPE 3 X-DIRECTI FRAME TYPE 3

LEVEL NO 3 ... LEVEL ID THIRD

COL	LOAD		BOTTOM-MOMENT	TOP-MOMENT	AXIAL FORCE	SHEAR FORCE
1	1	MAX	51.0672	54.7865	2.6854	-.9536
	1	MIN	51.0672	54.7865	2.6854	-.9536
1	2	MAX	26.3593	22.2977	-4.4971	-.4384
	2	MIN	26.3593	22.2977	-4.4971	-.4384
1	3	MAX	.2986	.2354	.0517	.0048
	3	MIN	-.2986	-.2354	-.0517	-.0048

BEAM	LOAD		LEFT-MOMENT	RIGHT-MOMENT
1	1	MAX	-114.6538	265.9347
	1	MIN	-114.6538	265.9347
1	2	MAX	-84.3544	-101.0274
	2	MIN	-84.3544	-101.0274
1	3	MAX	.9741	1.1464
	3	MIN	-.9741	-1.1464
2	1	MAX	-265.9347	.0000
	1	MIN	-265.9347	.0000
2	2	MAX	101.0274	-.0000
	2	MIN	101.0274	-.0000
2	3	MAX	1.1464	.0000
	3	MIN	-1.1464	-.0000

PANELS

BAY	LOAD		BOTTOM-MOMENT	TOP-MOMENT	AXIAL-FORCE	SHEAR-FORCE
2	1	MAX	-1554.2861	805.5714	-5.4854	6.2393
	1	MIN	-1554.2861	805.5714	-5.4854	6.2393
2	2	MAX	1870.2143	922.8369	4.4971	-23.2754
	2	MIN	1870.2143	922.8369	4.4971	-23.2754
2	3	MAX	30.8112	9.1369	.0517	.2255
	3	MIN	-30.8112	-9.1369	-.0517	-.2255

STORY SHEARS	LOAD CASES I	II	III	A	B
	-1.9659	0.	0.	7.2515	-23.7138

MEMBER FORCES ..... FRAME ID TYPE 3 X-CIRECTI FRAME TYPE 3

LEVEL NO 4 ... LEVEL ID ROOF

COL	LOAD		BOTTOM-MOMENT	TOP-MOMENT	AXIAL FORCE	SHEAR FORCE
1	1	MAX	48.2477	55.1235	1.8177	-.9313
	1	MIN	48.2477	55.1235	1.8177	-.9313
1	2	MAX	64.8352	86.1117	-2.5760	-1.3599
	2	MIN	64.8352	86.1117	-2.5760	-1.3599
1	3	MAX	.7737	1.0085	.0297	.0161
	3	MIN	-.7737	-1.0085	-.0297	-.0161

BEAM	LOAD		LEFT-MOMENT	RIGHT-MOMENT
1	1	MAX	-69.8670	312.8260
	1	MIN	-69.8670	312.8260
1	2	MAX	-89.3346	-159.2490
	2	MIN	-89.3346	-159.2490
1	3	MAX	1.0491	1.8177
	3	MIN	-1.0491	-1.8177
2	1	MAX	-312.8260	.0000
	1	MIN	-312.8260	.0000
2	2	MAX	159.2490	-.0000
	2	MIN	159.2490	-.0000
2	3	MAX	1.8177	.0000
	3	MIN	-1.8177	-.0000

PANELS

BAY	LOAD		BOTTOM-MOMENT	TOP-MOMENT	AXIAL-FORCE	SHEAR-FORCE
2	1	MAX	-1184.8900	-473.7115	-3.2177	13.8217
	1	MIN	-1184.8900	-473.7115	-3.2177	13.8217
2	2	MAX	-725.7568	288.0489	2.5760	3.6476
	2	MIN	-725.7568	288.0489	2.5760	3.6476
2	3	MAX	10.4052	3.3030	.0297	.1065
	3	MIN	-10.4052	-3.3030	-.0297	-.1065

STORY SHEARS	LOAD CASES	I	II	III	A	B
		.5435	0.	0.	12.3469	2.2877

...FRAME NO 6...
TIME REQUIRED FOR STRESS COMPUTATION = 1.22

...OUTPUT FOR FRAME NO 5 ...

FRAME TYPE = 2
FRAME ID TYPE 2 Y-DIRECTI

..LATERAL FRAME DISPLACEMENTS..

MAX...STATIC + DYNAMIC
MIN...STATIC - DYNAMIC

LEVEL		1	2	3
2	MAX	.0232256	.0986100	.0012614
	MIN	.0232256	.0986100	-.0012614
1	MAX	.0069373	.0377548	.0006138
	MIN	.0069373	.0377548	-.0006138

MEMBER FORCES ..... FRAME ID TYPE 2 Y-DIRECTI FRAME TYPE 2

LEVEL NO 1 ... LEVEL ID FIRST

COL	LOAD		BOTTOM-MOMENT	TOP-MOMENT	AXIAL FORCE	SHEAR FORCE
1	1	MAX	-13.4765	-6.6547	.7550	.1830
	1	MIN	-13.4765	-6.6547	.7550	.1830
1	2	MAX	-56.7825	-27.8490	3.2095	.7694
	2	MIN	-56.7825	-27.8490	3.2095	.7694
1	3	MAX	1.0330	.6563	.0385	.0153
	3	MIN	-1.0330	-.6563	-.0385	-.0153
2	1	MAX	-17.0366	-13.0121	-.0000	.2732
	1	MIN	-17.0366	-13.0121	-.0000	.2732
2	2	MAX	-71.8642	-54.7805	-.0000	1.1513
	2	MIN	-71.8642	-54.7805	-.0000	1.1513
2	3	MAX	1.2460	1.0312	.0000	.0207
	3	MIN	-1.2460	-1.0312	-.0000	-.0207
3	1	MAX	-13.4765	-6.6547	-.7550	.1830
	1	MIN	-13.4765	-6.6547	-.7550	.1830
3	2	MAX	-56.7825	-27.8490	-3.2095	.7694
	2	MIN	-56.7825	-27.8490	-3.2095	.7694
3	3	MAX	1.0330	.6563	.0385	.0153
	3	MIN	-1.0330	-.6563	-.0385	-.0153

BEAM	LOAD		LEFT-MOMENT	RIGHT-MOMENT
1	1	MAX	20.7311	17.6542
	1	MIN	20.7311	17.6542
1	2	MAX	87.9402	74.9053
	2	MIN	87.9402	74.9053
1	3	MAX	1.1757	.9901
	3	MIN	-1.1757	-.9901
2	1	MAX	17.6542	20.7311
	1	MIN	17.6542	20.7311
2	2	MAX	74.9053	87.9402
	2	MIN	74.9053	87.9402
2	3	MAX	.9901	1.1757
	3	MIN	-.9901	-1.1757

STORY SHEARS	LOAD CASES	I	II	III	A	B
		-.0067	0.	0.	.6459	2.6901

MEMBER FORCES ..... FRAME ID TYPE 2 Y-DIRECTI FRAME TYPE 2

LEVEL NO 2 ... LEVEL ID SECND

COL	LOAD		BOTTOM-MOMENT	TOP-MOMENT	AXIAL FORCE	SHEAR FORCE
1	1	MAX	-14.3788	-15.3836	.3285	.2706
	1	MIN	-14.3788	-15.3836	.3285	.2706
1	2	MAX	-61.4444	-65.5735	1.4001	1.1547
	2	MIN	-61.4444	-65.5735	1.4001	1.1547
1	3	MAX	.5820	.6912	.0147	.0115
	3	MIN	-.5820	-.6912	-.0147	-.0115
2	1	MAX	-23.8297	-25.0673	-.0000	.4445
	1	MIN	-23.8297	-25.0673	-.0000	.4445
2	2	MAX	-101.6109	-106.8283	-.0000	1.8949
	2	MIN	-101.6109	-106.8283	-.0000	1.8949
2	3	MAX	1.0539	1.1373	.0000	.0199
	3	MIN	-1.0539	-1.1373	-.0000	-.0199
3	1	MAX	-14.3788	-15.3836	-.3285	.2706
	1	MIN	-14.3788	-15.3836	-.3285	.2706
3	2	MAX	-61.4444	-65.5735	-1.4001	1.1547
	2	MIN	-61.4444	-65.5735	-1.4001	1.1547
3	3	MAX	.5820	.6912	.0147	.0115
	3	MIN	-.5820	-.6912	-.0147	-.0115

BEAM	LOAD		LEFT-MOMENT	RIGHT-MOMENT
1	1	MAX	16.4470	13.1140
	1	MIN	16.4470	13.1140
1	2	MAX	70.1201	55.8882
	2	MIN	70.1201	55.8882
1	3	MAX	.7324	.5945
	3	MIN	-.7324	-.5945
2	1	MAX	13.1140	16.4470
	1	MIN	13.1140	16.4470
2	2	MAX	55.8882	70.1201
	2	MIN	55.8882	70.1201
2	3	MAX	.5945	.7324
	3	MIN	-.5945	-.7324

STORY SHEARS	LOAD CASES	I	II	III	A	B
		-.0141	0.	0.	.9998	4.2043

...FRAME NO 5...
TIME REQUIRED FOR STRESS COMPUTATION = .40

...OUTPUT FOR FRAME NO 3 ...

FRAME TYPE = 1
FRAME ID TYPE 1 Y-DIRECTI

..LATERAL FRAME DISPLACEMENTS..

MAX...STATIC + DYNAMIC
MIN...STATIC - DYNAMIC

LEVEL		1	2	3
4	MAX	.0527120	.2422217	.0016732
	MIN	.0527120	.2422217	-.0016732
3	MAX	.0309439	.1476178	.0011292
	MIN	.0309439	.1476178	-.0011292
2	MAX	.0136735	.0676138	.0007146
	MIN	.0136735	.0676138	-.0007146
1	MAX	.0051983	.0255667	.0003479
	MIN	.0051983	.0255667	-.0003479

MEMBER FORCES ..... FRAME ID TYPE 1 Y-DIRECTI FRAME TYPE 1

LEVEL NO 1 ... LEVEL ID FIRST

COL	LOAD		BOTTOM-MOMENT	TOP-MOMENT	AXIAL FORCE	SHEAR FORCE
1	1	MAX	-37.9072	-17.4943	6.1901	.4991
	1	MIN	-37.9072	-17.4943	6.1901	.4991
1	2	MAX	-186.0137	-85.2739	28.3719	2.4440
	2	MIN	-186.0137	-85.2739	28.3719	2.4440
1	3	MAX	2.8141	1.6822	.1933	.0405
	3	MIN	-2.8141	-1.6822	-.1933	-.0405
2	1	MAX	-43.9217	-28.3467	-.0000	.6511
	1	MIN	-43.9217	-28.3467	-.0000	.6511
2	2	MAX	-217.0926	-141.3512	-.0000	3.2292
	2	MIN	-217.0926	-141.3512	-.0000	3.2292
2	3	MAX	3.3362	2.6248	.0000	.0537
	3	MIN	-3.3362	-2.6248	-.0000	-.0537
3	1	MAX	-37.9072	-17.4943	-6.1901	.4991
	1	MIN	-37.9072	-17.4943	-6.1901	.4991
3	2	MAX	-186.0137	-85.2739	-28.3719	2.4440
	2	MIN	-186.0137	-85.2739	-28.3719	2.4440
3	3	MAX	2.8141	1.6822	.1933	.0405
	3	MIN	-2.8141	-1.6822	-.1933	-.0405

BEAM	LOAD		LEFT-MOMENT	RIGHT-MOMENT
1	1	MAX	36.1188	31.3455
	1	MIN	36.1188	31.3455
1	2	MAX	185.9062	161.2412
	2	MIN	185.9062	161.2412
1	3	MAX	2.7006	2.2854
	3	MIN	-2.7006	-2.2854
2	1	MAX	31.3455	36.1188
	1	MIN	31.3455	36.1188
2	2	MAX	161.2412	185.9062
	2	MIN	161.2412	185.9062
2	3	MAX	2.2854	2.7006
	3	MIN	-2.2854	-2.7006

STORY SHEARS	LOAD CASES	I	II	III	A	B
		.0263	0.	0.	1.6230	8.1173

MEMBER FORCES ..... FRAME ID TYPE 1 Y-DIRECTI FRAME TYPE 1

LEVEL NO 2 ... LEVEL ID SECND

COL	LOAD		BOTTOM-MOMENT	TOP-MOMENT	AXIAL FORCE	SHEAR FORCE
1	1	MAX	-17.8805	-2.5205	5.4405	.1838
	1	MIN	-17.8805	-2.5205	5.4405	.1838
1	2	MAX	-97.9219	-27.7425	24.5147	1.1321
	2	MIN	-97.9219	-27.7425	24.5147	1.1321
1	3	MAX	.9880	1.3128	.1589	.0201
	3	MIN	-.9880	-1.3128	-.1589	-.0201
2	1	MAX	-35.9807	-22.5592	-.0000	.5274
	1	MIN	-35.9807	-22.5592	-.0000	.5274
2	2	MAX	-190.6402	-129.8256	-.0000	2.8871
	2	MIN	-190.6402	-129.8256	-.0000	2.8871
2	3	MAX	2.0650	2.0906	.0000	.0372
	3	MIN	-2.0650	-2.0906	-.0000	-.0372
3	1	MAX	-17.8805	-2.5205	-5.4405	.1838
	1	MIN	-17.8805	-2.5205	-5.4405	.1838
3	2	MAX	-97.9219	-27.7425	-24.5147	1.1321
	2	MIN	-97.9219	-27.7425	-24.5147	1.1321
3	3	MAX	.9880	1.3128	.1589	.0201
	3	MIN	-.9880	-1.3128	-.1589	-.0201

BEAM	LOAD		LEFT-MOMENT	RIGHT-MOMENT
1	1	MAX	62.0384	55.3525
	1	MIN	62.0384	55.3525
1	2	MAX	305.1562	271.2513
	2	MIN	305.1562	271.2513
1	3	MAX	2.1677	1.9334
	3	MIN	-2.1677	-1.9334
2	1	MAX	55.3525	62.0384
	1	MIN	55.3525	62.0384
2	2	MAX	271.2513	305.1562
	2	MIN	271.2513	305.1562
2	3	MAX	1.9334	2.1677
	3	MIN	-1.9334	-2.1677

STORY SHEARS	LOAD CASES	I	II	III	A	B
		.0535	0.	0.	.8415	5.1513

MEMBER FORCES ..... FRAME ID TYPE 1 Y-DIRECTI FRAME TYPE 1

LEVEL NO 3 ... LEVEL ID THIRD

COL	LOAD		BOTTOM-MOMENT	TOP-MOMENT	AXIAL FORCE	SHEAR FORCE
1	1	MAX	-64.3856	-40.3760	4.1361	.9438
	1	MIN	-64.3856	-40.3760	4.1361	.9438
1	2	MAX	-299.2474	-202.3911	18.1101	4.5193
	2	MIN	-299.2474	-202.3911	18.1101	4.5193
1	3	MAX	1.9453	1.2774	.1200	.0287
	3	MIN	-1.9453	-1.2774	-.1200	-.0287
2	1	MAX	-96.4428	-80.5410	-.0000	1.5944
	1	MIN	-96.4428	-80.5410	-.0000	1.5944
2	2	MAX	-450.7385	-386.0909	0.	7.5390
	2	MIN	-450.7385	-386.0909	0.	7.5390
2	3	MAX	2.8750	2.4431	.0000	.0478
	3	MIN	-2.8750	-2.4431	-.0000	-.0478
3	1	MAX	-64.3856	-40.3760	-4.1361	.9438
	1	MIN	-64.3856	-40.3760	-4.1361	.9438
3	2	MAX	-299.2474	-202.3911	-18.1101	4.5193
	2	MIN	-299.2474	-202.3911	-18.1101	4.5193
3	3	MAX	1.9453	1.2774	.1200	.0287
	3	MIN	-1.9453	-1.2774	-.1200	-.0287

BEAM	LOAD		LEFT-MOMENT	RIGHT-MOMENT
1	1	MAX	114.6662	99.9805
	1	MIN	114.6662	99.9805
1	2	MAX	512.1772	446.4931
	2	MIN	512.1772	446.4931
1	3	MAX	3.3457	2.9145
	3	MIN	-3.3457	-2.9145

2	1	MAX	99.9805	114.6662
	1	MIN	99.9805	114.6662
2	2	MAX	446.4931	512.1772
	2	MIN	446.4931	512.1772
2	3	MAX	2.9145	3.3457
	3	MIN	-2.9145	-3.3457

STORY SHEARS	LOAD CASES	I	II	III	A	B
		.0118	0.	0.	3.4702	16.5775

MEMBER FORCES ..... FRAME ID TYPE 1 Y-DIRECTI FRAME TYPE 1

LEVEL NO 4 ... LEVEL ID ROOF

COL	LOAD		BOTTOM-MOMENT	TOP-MOMENT	AXIAL FORCE	SHEAR FORCE
1	1	MAX	-77.7209	-83.0274	1.7511	1.4482
	1	MIN	-77.7209	-83.0274	1.7511	1.4482
1	2	MAX	-322.3722	-353.8176	7.4582	6.0918
	2	MIN	-322.3722	-353.8176	7.4582	6.0918
1	3	MAX	2.2496	2.4026	.0507	.0419
	3	MIN	-2.2496	-2.4026	-.0507	-.0419
2	1	MAX	-128.9196	-136.5796	-.0000	2.3919
	1	MIN	-128.9196	-136.5796	-.0000	2.3919
2	2	MAX	-545.5631	-582.8660	.0000	10.1660
	2	MIN	-545.5631	-582.8660	.0000	10.1660
2	3	MAX	3.7351	3.9539	.0000	.0693
	3	MIN	-3.7351	-3.9539	-.0000	-.0693
3	1	MAX	-77.7209	-83.0274	-1.7511	1.4482
	1	MIN	-77.7209	-83.0274	-1.7511	1.4482
3	2	MAX	-322.3722	-353.8176	-7.4582	6.0918
	2	MIN	-322.3722	-353.8176	-7.4582	6.0918
3	3	MAX	2.2496	2.4026	.0507	.0419
	3	MIN	-2.2496	-2.4026	-.0507	-.0419

BEAM	LOAD		LEFT-MOMENT	RIGHT-MOMENT
1	1	MAX	87.3053	70.2976
	1	MIN	87.3053	70.2976
1	2	MAX	371.3526	299.8889
	2	MIN	371.3526	299.8889
1	3	MAX	2.5261	2.0352
	3	MIN	-2.5261	-2.0352
2	1	MAX	70.2976	87.3053
	1	MIN	70.2976	87.3053
2	2	MAX	299.8889	371.3526
	2	MIN	299.8889	371.3526
2	3	MAX	2.0352	2.5261
	3	MIN	-2.0352	-2.5261

STORY SHEARS	LOAD CASES	I	II	III	A	B
		-.0897	0.	0.	5.3780	22.3496

...FRAME NO 3...
TIME REQUIRED FOR STRESS COMPUTATION = .83

TIME LOG (SECONDS)

FORM FRAME STIFFNESSES..... = 1.34
SOLVE STATIC LOAD CASES..... = .23
MODE SHAPES AND FREQUENCIES..... = 1.13
COMPUTE FRAME DISPLACEMENTS..... = .09
COMPUTE AND PRINT STRESSES AND DISPLS. = 2.62

TOTAL TIME..... = 5.41

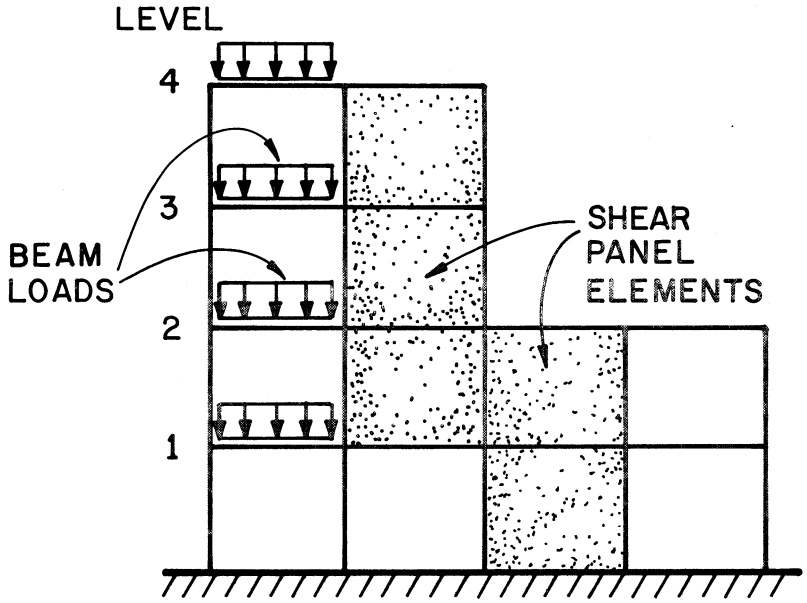

(a) ELEVATION–FRAME TYPE 3

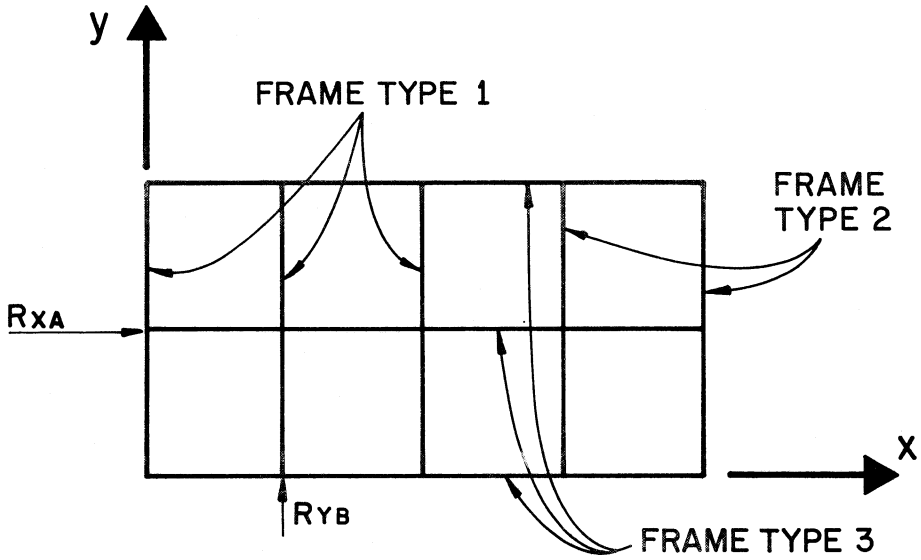

(b) PLAN

FIGURE D1 SKETCH OF TYPICAL BUILDING

EARTHQUAKE ENGINEERING RESEARCH CENTER REPORTS

EERC 67-1 "Feasibility Study Large-Scale Earthquake Simulator Facility", by J. Penzien, J. G. Bouwkamp, R. W. Clough, Dixon Rea - September 1967. (PB 187 905)*

EERC 68-1 Unassigned.

EERC 68-2 "Inelastic Behavior of Beam-to-Column Subassemblages Under Repeated Loading", by V. Bertero - April 1968. (PB 184 888)

EERC 68-3 "A Graphical Method for Solving the Wave Reflection-Refraction Problem", by H. D. McNiven and Y. Mengi - April 1968. (PB 187 943)

EERC 68-4 "Dynamic Properties of McKinley School Buildings", by D. Rea, J. G. Bouwkamp, R. W. Clough - November 1968. (PB 187 902)

EERC 68-5 "Characteristics of Rock Motions During Earthquakes", by H. B. Seed, I. M. Idriss, F. W. Kiefer - September 1968. (PB 188 338)

EERC 69-1 "Earthquake Engineering Research at Berkeley", January 1969. (PB 187 906)

EERC 69-2 "Nonlinear Seismic Response of Earth Structures", by M. Dibaj and J. Penzien - January 1969. (PB 187 904)

EERC 69-3 "Probabilistic Study of the Behavior of Structures During Earthquakes", by P. Ruiz and J. Penzien - March 1969. (PB 187 886)

EERC 69-4 "Numerical Solution of Boundary Value Problems in Structural Mechanics by Reduction to an Initial Value Formulation", by Nestor Distefano and Jaime Schujman - March 1969. (PB 187 942)

EERC 69-5 "Dynamic Programming and the Solution of the Biharmonic Equation", by Nestor Distefano - March 1969. (PB 187 941)

EERC 69-6 "Stochastic Analysis of Offshore Tower Structures", by Anil Kumar Malhotra and Joseph Penzien - May 1969. (PB 187 903)

EERC 69-7 "Rock Motion Accelerograms for High Magnitude Earthquakes", by H. B. Seed and I. M. Idriss - May 1969. (PB 187 940)

EERC 69-8 "Structural Dynamics Testing Facilities at the University of California, Berkeley", by R. M. Stephen, J. G. Bouwkamp, R. W. Clough and J. Penzien - August 1969. (PB 189 111)

EERC 69-9 "Seismic Response of Soil Deposits Underlain by Sloping Rock Boundaries", by Houshang Dezfulian and H. Bolton Seed - August 1969. (PB 189 114)

EERC 69-10 "Dynamic Stress Analysis of Axisymmetric Structures Under Arbitrary Loading", by Sukumar Ghosh and E. L. Wilson - September 1969. (PB 189 026)

EERC 69-11 "Seismic Behavior of Multistory Frames Designed by Different Philosophies", by James C. Anderson and V. Bertero - October 1969. (PB 190 662)

EERC 69-12 "Stiffness Degradation of Reinforced Concrete Structures Subjected to Reversed Actions", by V. Bertero, B. Bresler, Huey Ming Liao - December 1969. (PB 202 942)

EERC 69-13 "Response of Non-Uniform Soil Deposits to Traveling Seismic Waves", by H. Dezfulian and H. B. Seed - December 1969. (PB 191 023)

EERC 69-14 "Damping Capacity of a Model Steel Structure", by Dixon Rea, R. W. Clough and J. G. Bouwkamp - December 1969. (PB 190 663)

EERC 69-15 "Influence of Local Soil Conditions on Building Damage Potential During Earthquakes", by H. Bolton Seed and I. M. Idriss - December 1969. (PB 191 036)

EERC 69-16 "The Behavior of Sands Under Seismic Loading Conditions", by Marshall L. Silver and H. Bolton Seed - December 1969. (AD 714 982)

EERC 70-1 "Earthquake Response of Concrete Gravity Dams", by A. K. Chopra - December 1970. (AD 709 640)

EERC 70-2 "Relationships Between Soil Conditions and Building Damage in the Caracas Earthquake of July 29, 1967", by H. Bolton Seed, I. M. Idriss and H. Dezfulian - February 1970. (PB 195 762)

EERC 70-3 "Cyclic Loading of Full Size Steel Connections", by E. P. Popov and R. M. Stephen - July 1970.

EERC 70-4 "Seismic Analysis of the Charaima Building, Caraballeda, Venezuela", by Subcommittee of the SEAONC Research Committee, V. V. Bertero, Paul F. Fratessa, Stephen A. Mahin, Joseph H. Sexton, Alexander C. Scordelis, Edward L. Wilson, Loring A. Wyllie, H. Bolton Seed, Joseph Penzien, Chairman - August 1970. (PB 201 455)

EERC 70-5 "A Computer Program for Earthquake Analysis of Dams", by Anil K. Chopra - September 1970. (AD 723 994)

EERC 70-6 "The Propagation of Love Waves Across Non-Horizontally Layered Structures", by John Lysmer and Lawrence A. Drake - October 1970. (PB 197 896)

EERC 70-7 "Influence of Base Rock Characteristics on Ground Response", by John Lysmer, H. Bolton Seed and Per B. Schnabel - November 1970. (PB 197 897)

EERC 70-8 "Applicability of Laboratory Test Procedures for Measuring Soil Liquefaction Characteristics Under Cyclic Loading", by H. Bolton Seed and W. H. Peacock - November 1970. (PB 198 016)

EERC 70-9 "A Simplified Procedure for Evaluating Soil Liquefaction Potential", by H. Bolton Seed and I. M. Idriss - November 1970. (PB 198 009)

EERC 70-10 "Soil Moduli and Damping Factors for Dynamic Response Analysis", by H. Bolton Seed and I. M. Idriss - December 1970. (PB 197 869)

EERC 71-1 "Koyna Earthquake and the Performance of Koyna Dam", by Anil K. Chopra and P. Chakrabarti - April 1971. (AD 731 496)

EERC 71-2 "Preliminary In-Situ Measurements of Anelastic Absorption in Soils Using a Prototype Earthquake Simulator", by Roger D. Borcherdt and Peter W. Rodgers - April 1971. (PB 201 454)

EERC 71-3 "Static and Dynamic Analysis of Inelastic Frame Structures", by Frank L. Porter and Graham H. Powell - June 1971. (PB 210 135)

EERC 71-4 "Research Needs in Limit Design of Reinforced Concrete Structures", by V. Bertero - June 1971. (PB 202 943)

EERC 71-5 "Dynamic Behavior of a High-Rise Diagonally Braced Steel Building", by Dixon Rea, A. A. Shah and J. G. Bouwkamp - August 1971. (PB 203 584)

EERC 71-6 "Dynamic Stress Analysis of Porous Elastic Solids Saturated With Compressible Fluids", by Jamshid Ghaboussi and E. L. Wilson - August 1971. (PB 211 396)

EERC 71-7 "Inelastic Behavior of Steel Beam-to-Column Subassemblages", by Helmut Krawinkler, Vitelmo V. Bertero and Egor P. Popov - October 1971. (PB 211 335)

EERC 71-8 "Modification of Seismograph Records for Effects of Local Soil Conditions", by P. Schnabel, H. Bolton Seed and J. Lysmer - December 1971.

EERC 72-1 "Static and Earthquake Analysis of Three Dimensional Frame and Shear Wall Buildings", by E. L. Wilson and H. H. Dovey - May 1972. (PB 212 589)

EERC 72-2 "Accelerations in Rock For Earthquakes in the Western United States", by Per B. Schnabel and H. Bolton Seed - July 1972.

EERC 72-3 "Elastic-Plastic Earthquake Response of Soil-Building Systems" by Tadao Minami and J. Penzien - August 1972.

EERC 72-4 "Stochastic Inelastic Response of Offshore Towers to Strong Motion Earthquakes", by Maharaj K. Kaul and J. Penzien - August 1972.

EERC 72-5 "Cyclic Behavior of Three Reinforced Concrete Flexural Members With High Shear", by E. P. Popov, V. V. Bertero and H, Krawinkler - October 1972.

EERC 72-6 "Earthquake Response of Gravity Dams Including Reservoir Interaction Effects", by P. Chakrabarti and A. K. Chopra - December 1972.

EERC 72-7 "Dynamic Properties of Pine Flat Dam", by D. Rea, C-Y. Liao and A. K. Chopra - December 1972.

EERC 72-8 "Three Dimensional Analysis of Building Systems" by E. L. Wilson and H. H. Dovey - December 1972.

EERC 72-9 "Rate of Loading Effects on Uncracked and Repaired Reinforced Concrete Members", by V. V. Bertero, D. Rea, S. Mahin and M. B. Atalay - December 1972.

---

* Numbers in parentheses are Accession Numbers assigned by the National Technical Information Service. Copies of these reports may be ordered from National Technical Information Service, Springfield, Virginia 22151.